engineering center
energoservice

Input/output modules ENMV-1

Manual

ENMV.423000.001. Rev 01.2017

Table of contents

Introduction

The Manual describes information about functions, recommendations for use, technical support, maintenance, packing, transportation, storage, as well as connection diagrams.

Read this manual carefully before using the device.

Typical users

Engineers, personnel who refers with setting, operations and maintenance.

Validity range

This manual applies to:

- ENMV-1-24/0;
- ENMV-1-16/6;
- ENMV-1-16/3R;
- ENMV-1-0/22;
- ENMV-1-0/20;
- ENMV-1-4/3R, ENMV-1-0/3R.

Support

For questions about devices, please contact with technical support «Engineering center «Energoservice»:

Website: www.enip2.com

Phone: +7 (8182) 65-75-65

E-mail: enip2@ens.ru

ATTENTION:
- Use ENMV-1 only according to this manual;
- ENMV-1 should be installed, operated and maintained only by qualified personnel;
- Do not use any cleanser except recommended by manufacturer;
- Save ENMV-1 from impact;
- Before connecting ENMV-1, you must ensure that the local power supply conditions agree with the specifications on the label on the ENNV-1.

NOTICE:
- The information contained in this document is subject to change without notice;
- New features may be add without notice.

Glossary

- AC – Alternating current
- DC – Direct current
- DI – Digital input
- DIO – Digital signal (Virtual digital input)
- DO – Digital output
- EMC – Electromagnetic compatibility
- IED – Intelligent electronic device
- PE –Protective earth
- PC – personal computer
- RTU – Remote Terminal Unit
- SCADA –Supervisory Control And Data Acquisition
- SSR – Solid-state relay

1 General information

ENMV is a series of binary and analog input/output devices equipped with control relays intended for use with remote terminal units or standalone in automated systems at substations and power plants. In combination with IED ENIP-2 measuring units and RTU ENCS-3m data concentrators, ENMV can be used for creating distributed remote control systems. Main purpose of ENMV is input and output digital signals and data transfer via galvanically isolated interfaces RS-485 and Ethernet. ENMV may transfer data directly or through ENIP-2, ENCS-3m or other automation equipment.

Configuring is carried out by software «ES Configurator» (download).

ENMV-1 is multifunctional, repairable, restorable device. It designed for continuous operation in industrial installations.

Manufacturer Engineering Center "Energoservice"
26 Kotlasskaya St., 163046 Arkhangelsk, RUSSIA
tel.: +7(8182)64-60-00, +7(8182)65-75-65; fax: +7(8182)23-69-55

2 Naming convention, design and dimension

Power supply voltage
220 – 100–265 V AC (45–55 Hz)
or 120–370 V DC
24 – 18–36 V DC

i/o module types
1 – digital input and output

ENMV - X - X - X - X

i/o set

ENMV-1:
24/0 – 24 digital inputs
0/22 – 22 digital outputs
0/3R – 3 relay outputs
4/3R – 4 digital inputs / 3 relay outputs

Interfaces sets

ENMV-1-0/3R, ENMV-1-4/3R:
A1 – 1 x RS-485

ENMV-1-24/0, ENMV-1-0/22:
A2E0 – 2 x RS-485
A2E4 – 2 x RS-485, 1 x Ethernet 100Base-T

2.1 ENMV-1-24/0, ENMV-1-0/22

ENMV-1 has plastic case housing for DIN-rail mounting.

Front panel of ENMV-1-24/0 see on Fig. 2.1.

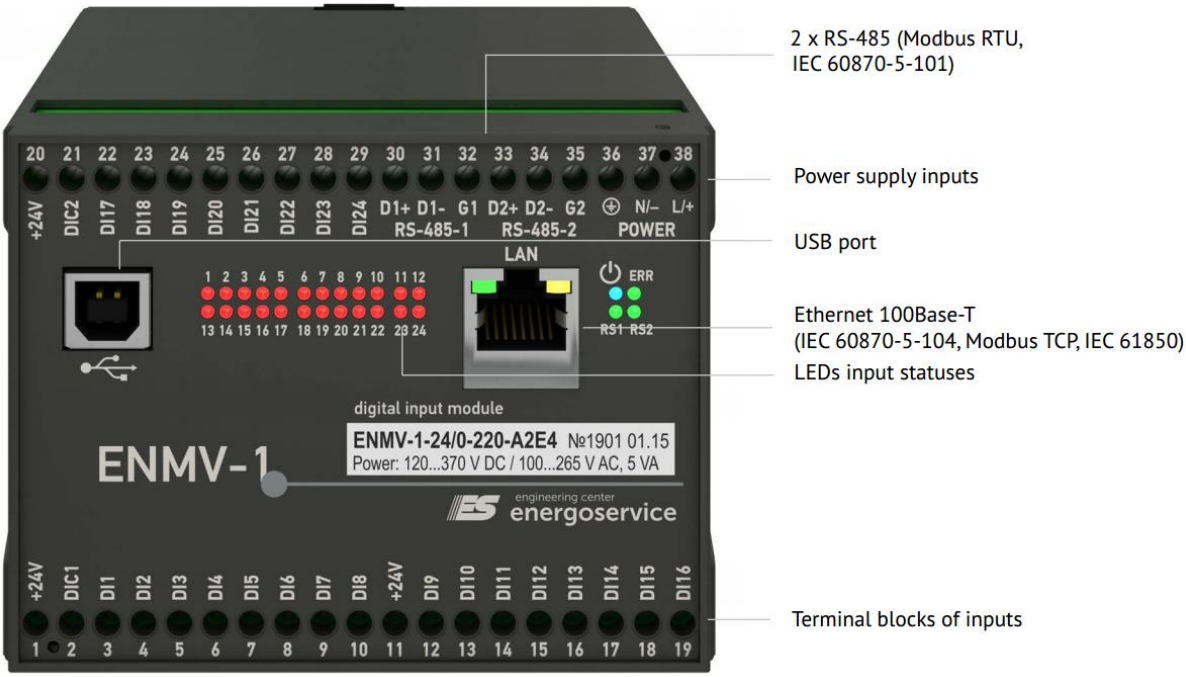

Figure 2.1. ENMV-1-0/24-220-A2E4

Front panel of ENMV-1-0/22 see on Fig. 2.2.

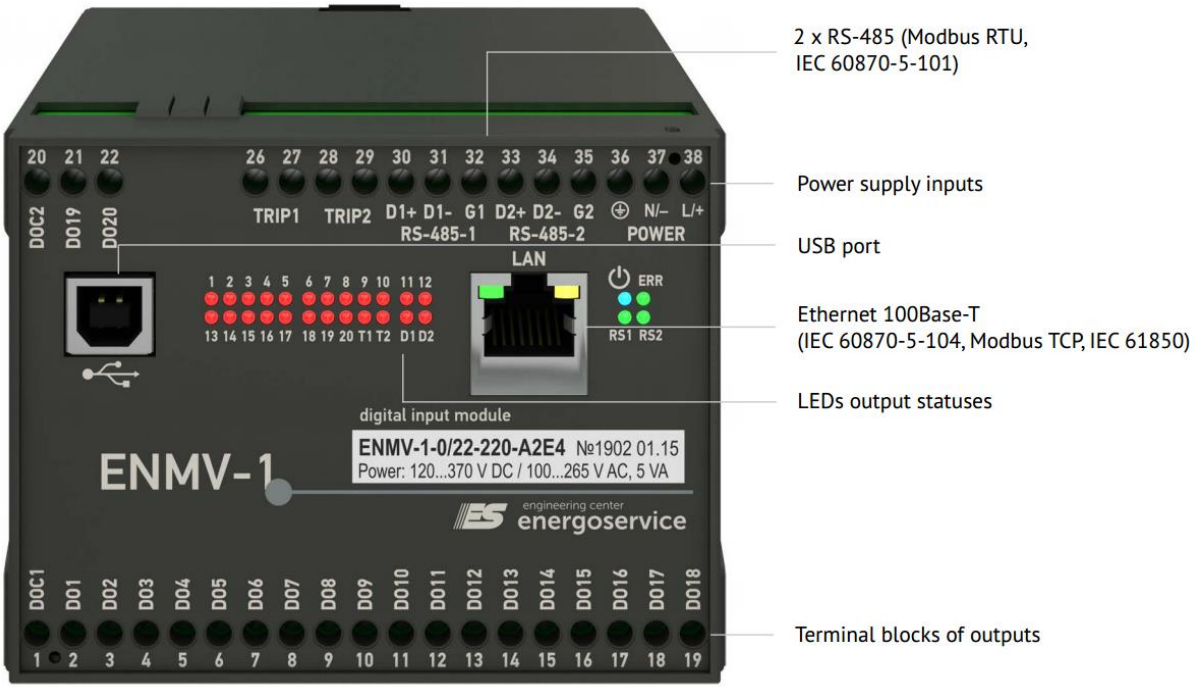

Figure 2.2. ENMV-1-22/0-220-A2E4

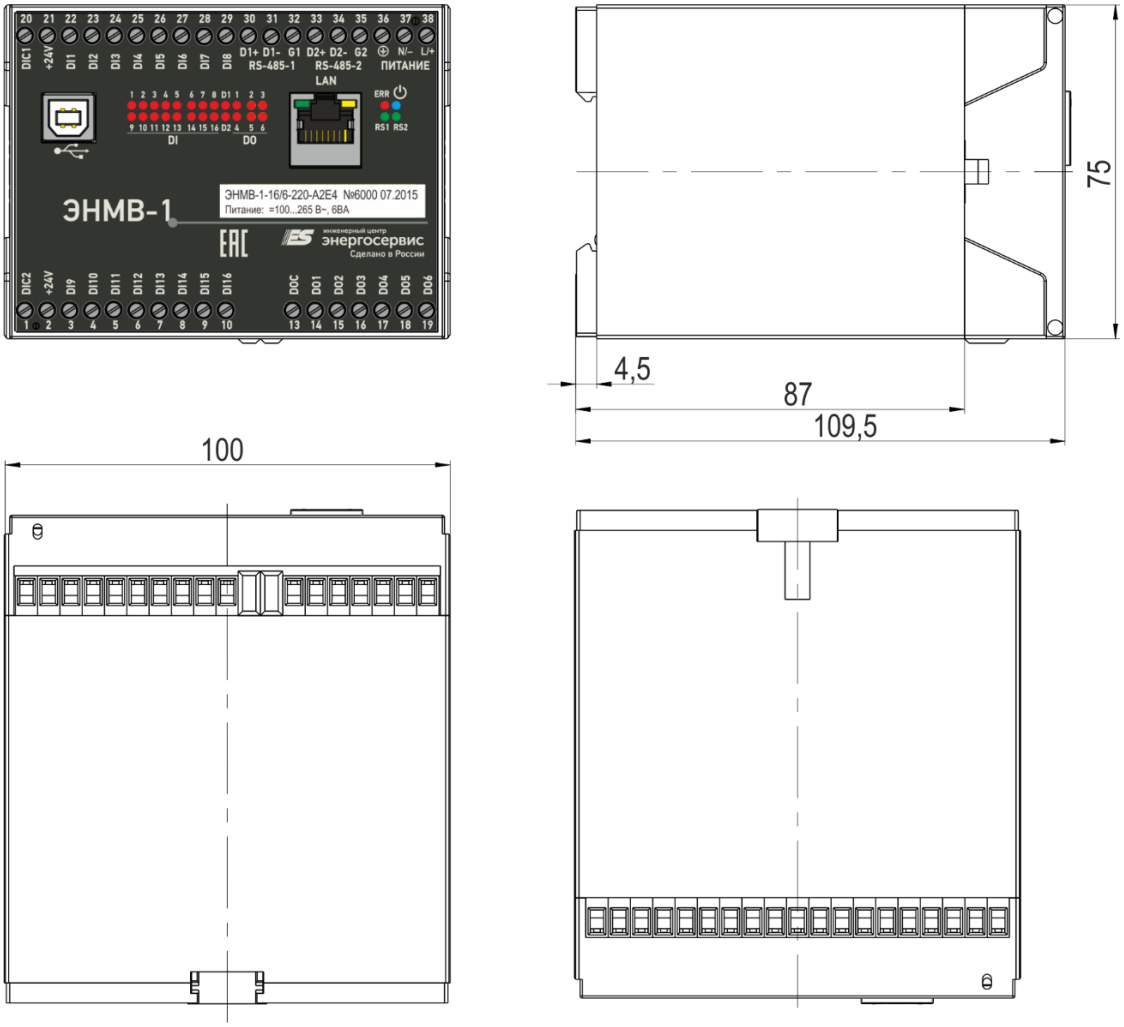

Figure 2.3. Dimension of ENMV-1-24/0 and ENMV-1-0/22 (in mm)

2.2 ENMV-1-4/3R, ENMV-1-0/3R

ENMV-1 has plastic case housing for DIN-rail mounting.

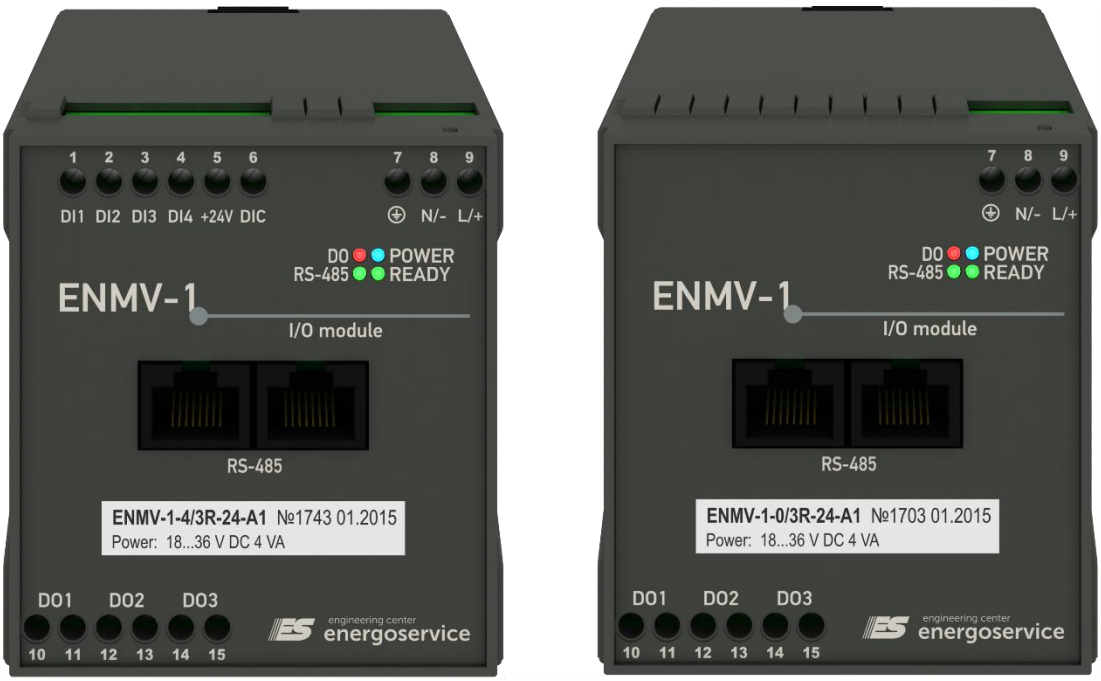

Figure 2.4. Front side of ENMV-1-4/3R and ENMV-1-0/3R

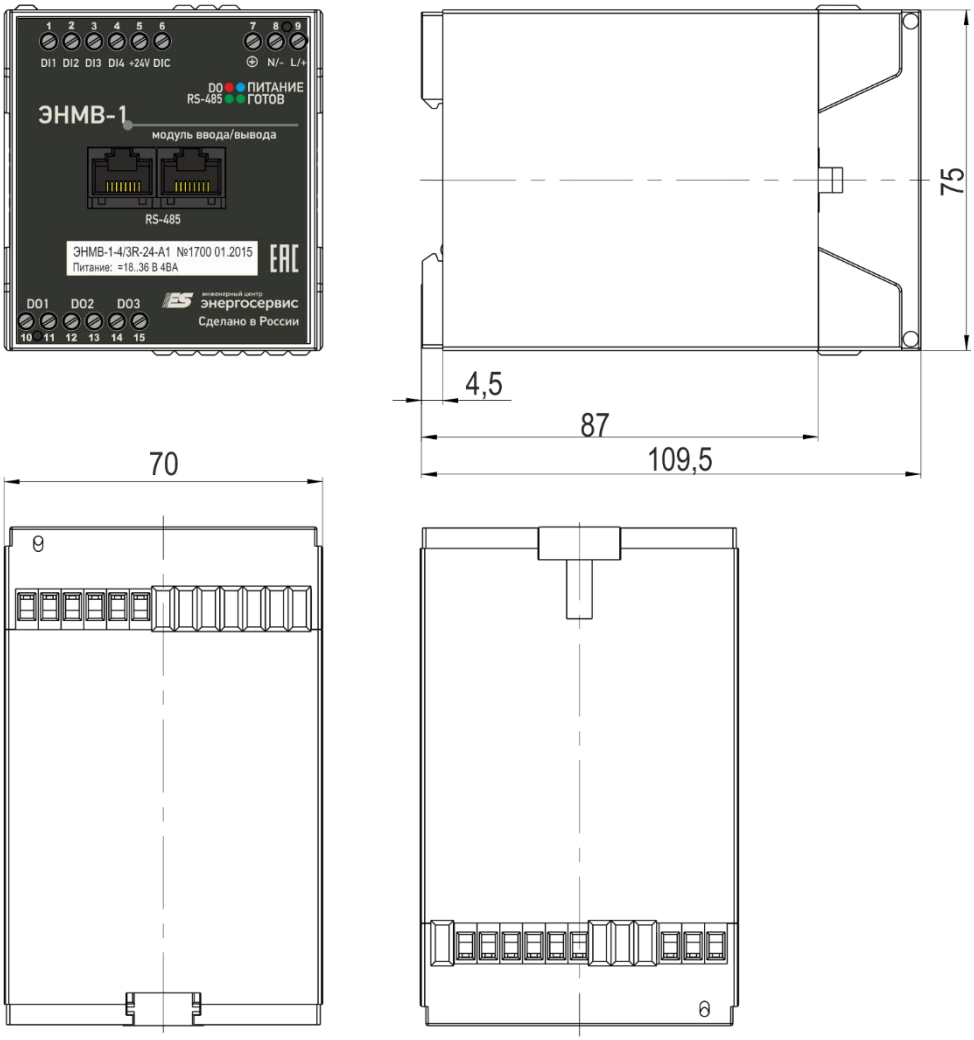

Figure 2.5. Dimension of ENMV-1-4/3R and ENMV-1-0/3R (in mm)

3 Features

3.1 Digital outputs

ENMV-1's digital outputs («DO») are intended for control switchgear, intermediate relay, status indication and etc.

There are three types of digital outputs:

- Electromagnetic relay (DO on ENMV-1-0/3R, ENMV-1-4/3R);
- Low-voltage solid-state relay (DO on ENMV-1-0/22, ENMV-1-16/6);
- Solid-state relay for power applications (TRIP on ENMV-1-0/22).

For low-voltage SSR use intermediate relay if current is more than 120 mA:

  – AC: Finder 55.33.8.230.0010, Relpol (R4-2014-23-5230-WT) or similar;

  – DC: Finder 55.33.9.220.0010, Relpol (R4-2014-23-1220-WT) or similar.

ENMV-1 (except ENMV-1-0/3R) has events log of DO statuses. Each record of event log is marked with timestamp with 1 ms resolution.

3.1.1 ENMV-1-0/3R, ENMV-1-4/3R, ENMV-1-16/3R

For this modifications command execution takes place in two stages, first ON/OFF relay is operated, then switched on the control relay. Internal connection diagram of DO see in Fig. 1.12.

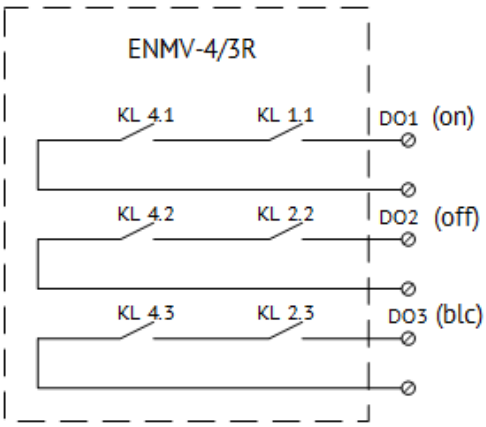

KL1, KL2, KL3 – operating relay; KL4 – control relay.
Figure 1.12. Connection diagram of DO ENMV-1-X/3R

Default outputs ON and OFF don't operating together. If DO ON is switched on, DO OFF is switched off and vice versa. DO BLC switched on/off together with one of DO.

You can configure independent operation for each DO (only for Modbus). It allow control DO without changing state of others.

You can use ENMV-1-X/3R as external telecontrol module for ENIP-2, connected via RS-485. In this case independent operation of DO is unavailable.

For ENMV-1-4/3R can be chosen blocking DI, whose active status is blocked execution of DO.

3.1.2 ENMV-1-0/22, ENMV-1-0/20, ENMV-1-16/6

ENMV-1-0/22 has 11 couple of DO, odd number intended for ON, even for OFF.

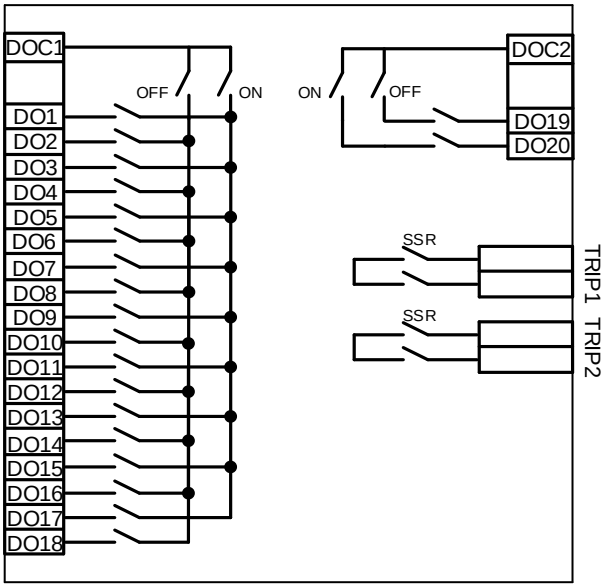

Figure 1.14. Internal connection diagram of ENMV-1-0/22

Control via IEC 60870-5-101(104) as follows (ENMV-1-0/22, ENMV-1-0/20, ENMV-1-16/6):

1. After command «ON», sending to address n or n+1 (for example 1 and 2), DO(1) switched on, DO(2) switched off;
2. After command «OFF», sending to address n or n+1 (for example 1 and 2), DO(2) switched on, DO(1) switched off

You can use independent operation of DO for controlling through Modbus.

Connection diagrams see in Appendix A.

3.2 Digital inputs

ENMV-1-24/0, ENMV-1-16/6, ENMV-1-16/3R and ENMV-1-4/3R are equipped with 24/16/16/4 opto-isolated digital inputs with debounce filter respectively. For digital inputs, both wet and dry contacts are supported. Dry contacts are powered by built-in 24 V DC supply.

ENMV-1 (except ENMV-1-4/3R) has events log of DI statuses. Each record of event log is marked with timestamp with 1 ms resolution.

DI statuses are can transferred over IEC 60870-5-101, IEC 60870-5-104 in Single point or Double point and over Modbus using 0x01 and 0x03 Function codes.

Connection diagrams see in Appendix A.

3.3 Logic

ENMV-1 (except ENMV-1-4/3R, ENMV-1-0/3R) using statuses of DI, DO and GOOSE allows to create logical schemes. It can be used for switchgear interlocking protection, transfer switch and etc.

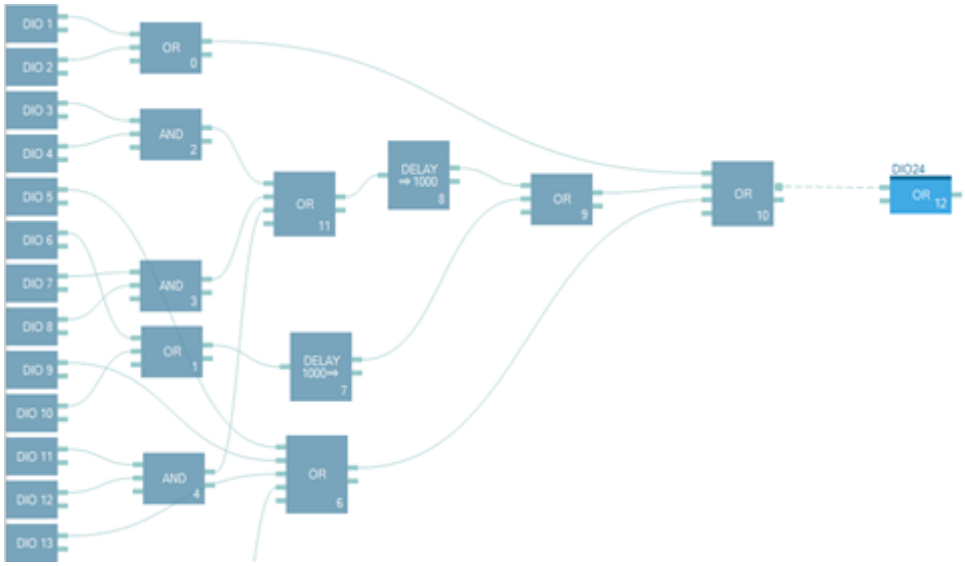

Figure 3.1. Example of logical scheme from «ES Configurator».

3.4 Real-time clock

ENMV-1 (except ENMV-1-4/3R, ENMV-1-0/3R) has real time clock. It allow to save event logging and to transmit data with timestamp over IEC 60870-5-101/104 and IEC 61850.

The following table gives all available sources for sync time:

Ethernet	IEC 60870-5-104, SNTP, sync module ENCS-2
RS-458	IEC 60870-5-101, sync module ENCS-2

Time sync may be UTC or local time.

Timestamp over IEC 60870-5-101/104 may transmit with UTC or local time (with summer/winter time).

All settings, including time source, validity checking and time zone are configured by «ES Configurator».

Time accuracy with synchronization is up to 500 μs. Without synchronization ENMV-1 has up to 0.3 seconds error per day.

3.5 Protocols

Communication with control system is carried out through:

- RS-485:
  - Modbus RTU,
  - IEC 60870-5-101;
- Ethernet 100Base-T (for ENMV-1-...-A2E4):
  - Modbus TCP/RTU,
  - IEC 60870-5-101/104,
  - IEC 61850: GOOSE, MMS (option).

All ports setting is configured by «ES Configurator».

Modbus description see in appendix C. IEC 60870-5-101, IEC 60870-5-104 description see in appendix B.

- Default settings of ENMV-1-24/0, ENMV-1-0/22, ENMV-1-0/20, ENMV-1-16/6, ENMV-1-16/3R:

RS-485: Modbus RTU, baudrate 19200 bps, parity None, slave address 0x01.

Ethernet 100Base-T: IP 192.168.0.10, login: admin, password: admin;

client 1: 255.255.255.255, port 2404, protocol IEC 60870-5-104;

client 2: 255.255.255.255, port 2404, protocol IEC 60870-5-104;

client 3: 255.255.255.255, port 2404, protocol IEC 60870-5-104;

client 4: 255.255.255.255, port 2404, protocol IEC 60870-5-104.

- Default settings of ENMV-1-4/3R, ENMV-1-0/3R:

RS-485: Modbus RTU, baudrate 19200 bps, parity None, slave address 0x02.

3.6 LED indicators

LED	ENMV-1-24/0, ENMV-1-0/22	ENMV-1-4/3R, ENMV-1-0/3R
⏻	Power supply	
«RS1»/«RS2» or «RS-485»	Red: transmit data via RS-485; Green: receive data via RS-485	
«LAN»	Yellow: link is up Green: data communication	-
«DI» or «DO»	DI or DO switch on	-
«Ready»	-	Green: no error; Flashing red: fault
«DO»	-	Red: DO ON Green: DO OFF

4 Specification

4.1 Technical data

Table 4.1

Parameter	ENMV-1-24/0, ENMV-1-0/22, ENMV-1-0/20, ENMV-1-16/6, ENMV-1-16/3R	ENMV-1-4/3R, ENMV-1-0/3R
Dimension, WxHxD, mm	75x100x110, IP40	75x70x110, IP40
Mounting	35-mm DIN-rail	
Communication	2-wire RS-485 Protocols: Modbus RTU, IEC 60870-5-101-2006; Baudrate: 1200-115200 bps Parity: even, none, odd. Ethernet (for ENMV-1-...-A2E4) Protocols: Modbus TCP, IEC 60870-5-104-2004; IEC 61850 (GOOSE, MMS); NTP (sync time).	2-wire RS-485: Protocol: Modbus RTU, IEC 60870-5-101-2006; Baudrate: 1200-115200 bps Parity: even, none, odd.
Digital inputs	24 for ENMV-1-24/0: 16 for ENMV-1-16/X: «wet contact», «dry contact»; U = 18...36 V (AC/DC) or U = 190...250 B (AC/DC); Imax = 2 mA; Debounce filter: 1-2550 ms; Internal power supply 24 V DC for DI	4 for ENMV-1-4/3R: «wet contact», «dry contact»; U = 24 V DC; Imax = 10 mA; Debounce filter: 1-2550 ms; Internal power supply 24 V DC for DI
Digital outputs	20 SSR for ENMV-1-0/20, ENMV-1-0/22: 6 SSR for ENMV-1-16/6: Contact voltage: 250 V AC, 300 V DC; I continuous = 0.1 A. 2 TRIP for ENMV-1-0/22: Contact voltage: 250 V DC, I continuous = 3.5 A. 3 Electromagnetic relay outputs for ENMV-1-16/3R: Contact voltage: 250 V AC/DC; I continuous = 7 A. I max = 15 A. Switched off capacity = 25 VA.	3 Electromagnetic relay outputs: Contact voltage: 250 V AC/DC; I continuous = 7 A. I max = 15 A. Switched off capacity = 25 VA.

4.2 Operating condition

Table 4.2

Condition	Value
Temperature, °C	-40...+70
Relativity humanity ,%	5-95%
Atmospheric pressure, kPa	70-106

Turn-on time	<30 sec
MTBF	100000 h
Device life	15 year

4.3 Power supply

Table 4.3

	ENMV-1-X/X-220-XX	ENMV-1-X/X-24-XX
Voltage AC	100...265 V AC, 45...55 Hz	-
Voltage DC	120...370 V DC	18...36 V DC
Consumption	12 VA	12 VA

5 Package content

i/o module ENMV-1	- 1;
ENMV-1. ENMV.423000.00X PC	- 1;
CD with Manual ENMV.423000.001 and «ES Configurator»	- 1.

All documentation and software update see on http://www.enip2.com/support

6 Operation

6.1 Before performing installation

After receiving ENMV-1 from manufacturer, make sure that packing has no defects.

Unpacking ENMV-1, check the package contents.

Compare characteristics in passport with label on front side of device.

Before connect/disconnect ENMV-1 to digital interface or digital i/o make sure that all sources of power supply are disconnected.

Connection ENMV-1 to RTU (or SCADA) is provided according to manual of RTU (SCADA).

Do not use ENMV-1 in explosive or corrosive environment.

Save ENMV-1 from heating above 70 °C, large temperature variations and strong electro-magnetic fields.

6.2 Mounting and connection

For safety, you must read the instructions in this manual before performing mounting and operation. Only qualified personnel should be allowed for mounting.

ENMV-1 is mounted on 35mm DIN-rail.

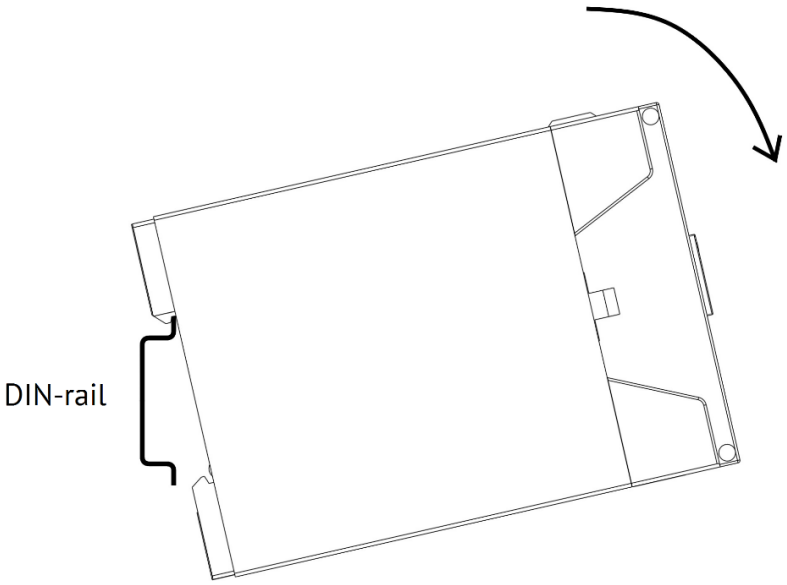

Figure 6.1. ENMV-1 installation to 35 mm DIN-rail

Pull down the clip in bottom to remove ENMV-1 from DIN-rail.

Recommendation for wires:

Tightening torque is 0.5 to 0.6 N·m.

Terminals	ENMV-1 recommended wires
Power supply	2.5 mm^2 wires (AWG 14)
Digital I/O	2.5 mm^2 wires (AWG 14)
Digital interface	0.5 mm^2 wires (AWG 24) or shielded patch cord Cat5 cables using 8P8C (RJ-45)

Recommendation for protection:

Use surge protection devices for power supply and digital interfaces.

For example P IV and DTR-2/6 by Hakel.

7 Maintenance and repair

Maintenance should be according to this manual. Only qualified personnel should perform it.

Repair of defective device produced by manufacturer. Do not open the housing during operation. Opening the ENMV voids the warranty.

For preventive maintenance, follow instruction bellow:

- Disconnect power supply and digital interfaces;
- Remove dust;
- Check device for defects;
- Check mount;
- Connect power supply and digital interfaces.

For cleaning use non abrasive detergent or 70% ethanol-water solution.

8 Transporting, storage and packing

ENMV-1 is transported in any covered transport (railway, car, aviation). Transports conditions temperature is –50…+70ºC, relative humidity is 95% at 30ºC. Save ENMV-1 from impact during the transport.

ENMV-1 is delivered in packaging case. Package has content according to page 18.

Net weight – up to 1 kg.

Gross weight – up to 1.5 kg.

Appendix A. Connection diagrams.

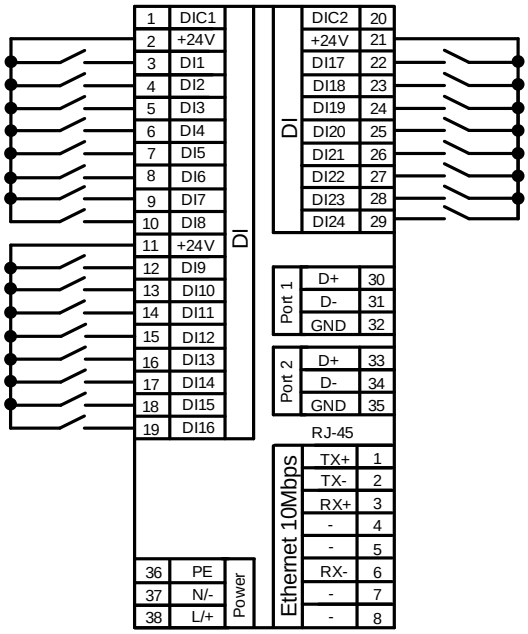

Figure A.1. Connection diagram of ENMV-1-24/0 for «wet contact».

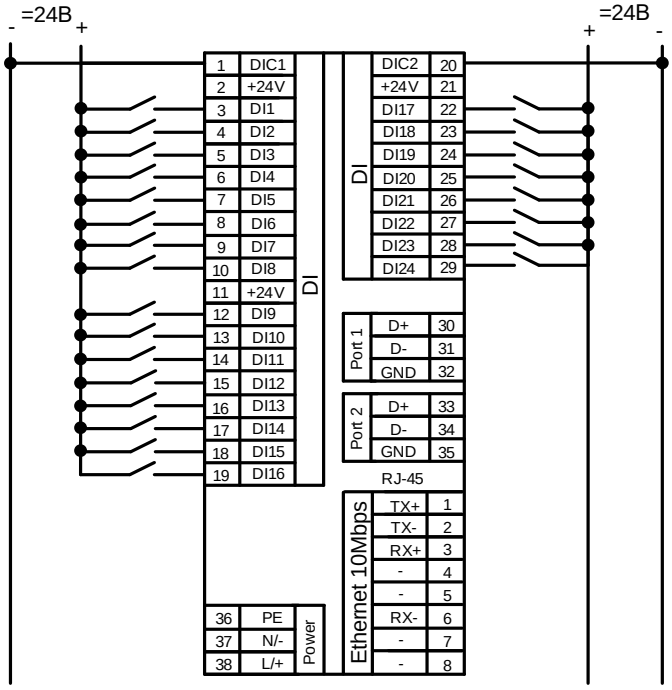

Figure A.2. Connection diagram of ENMV-1-24/0 for «dry contact».

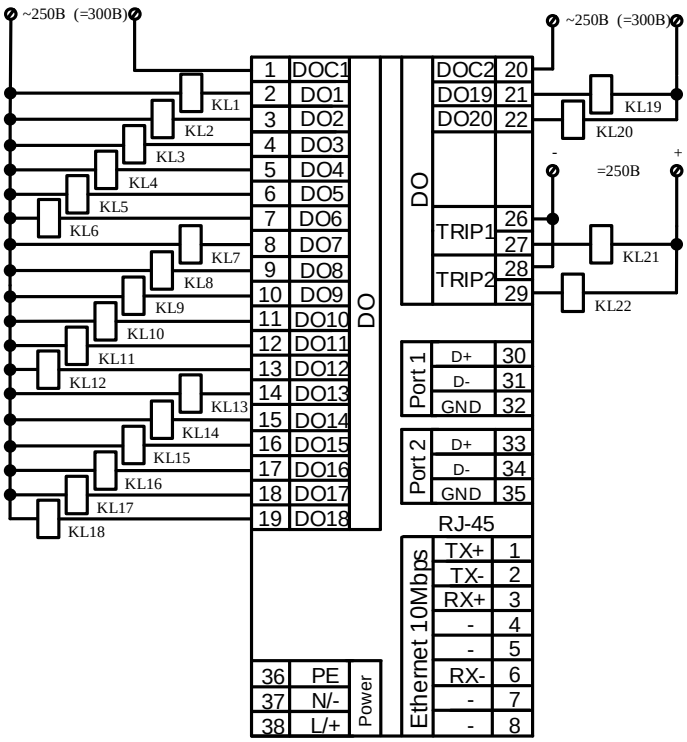

Figure A.3. Connection diagram ENMV-1-0/22-220-A2E4

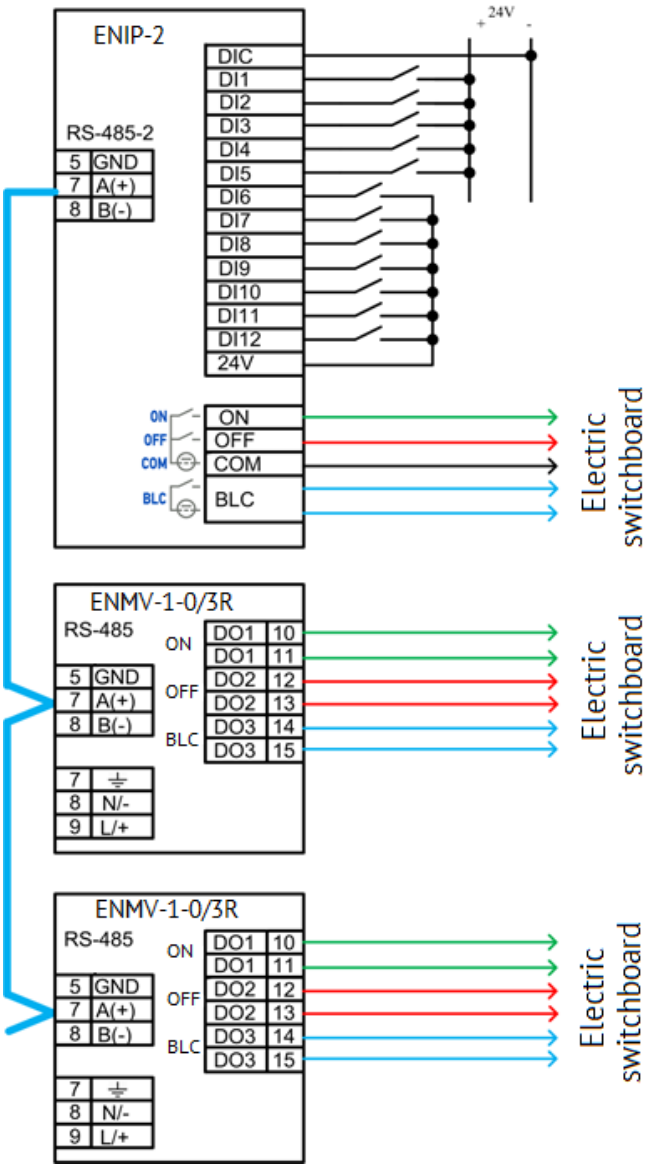

Figure A.4. Connection diagram of ENMV-1-0/3R with ENIP-2 to electric switchboard.

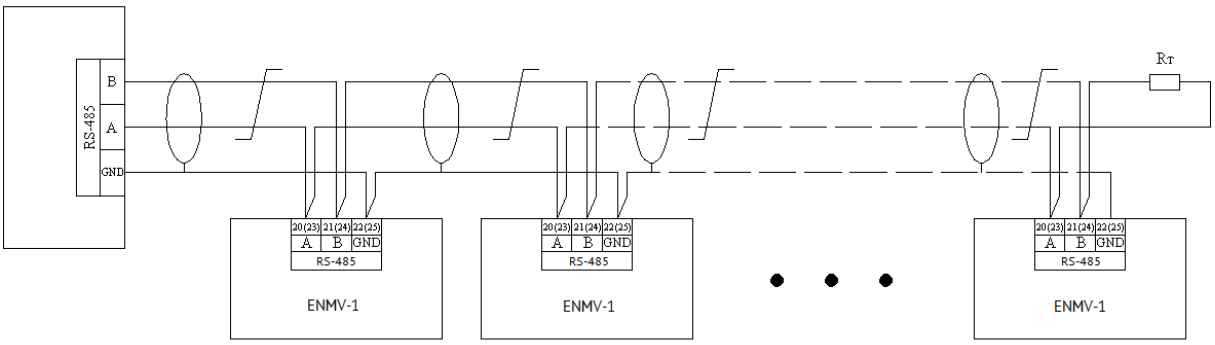

Figure A.5. Connection diagram of ENMV-1 to RS-485 bus.

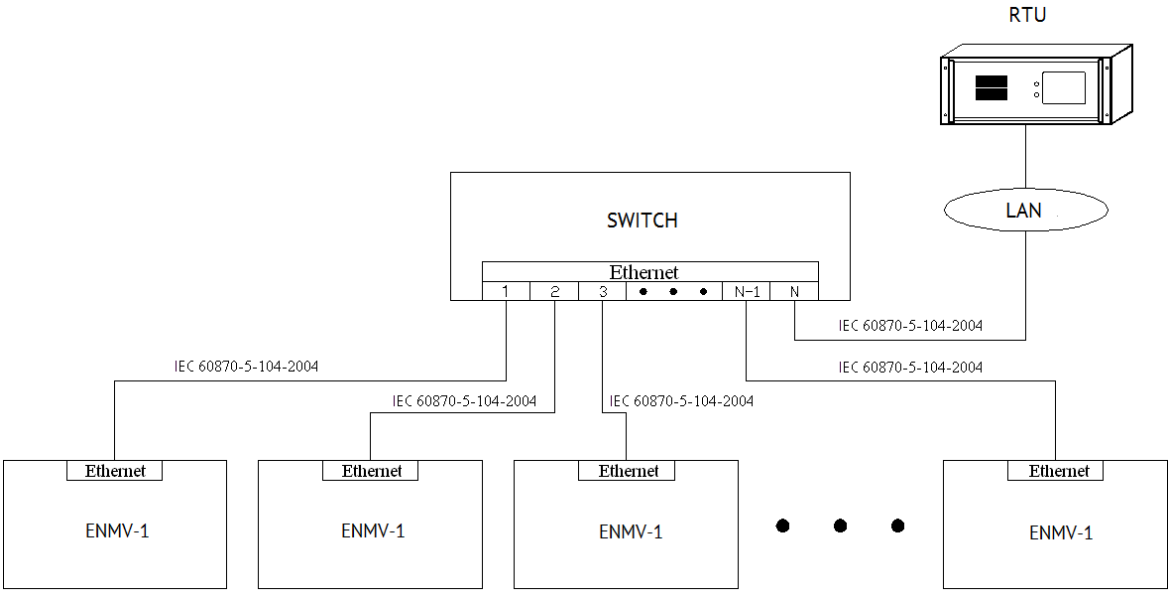

Figure A.6. Connection diagram of ENMV-1 to Ethernet.

Appendix B. ENMV-1: IEC 60870-5-101 and IEC 60870-5-104

IEC 60870-5-101/104 Protocol Implementation Conformance Statement

This companion standard presents sets of parameters and alternatives from which subsets have to be selected to implement particular telecontrol systems. Certain parameter values, such as the number of octets in the COMMON ADDRESS of ASDUs represent mutually exclusive alternatives. This means that only one value of the defined parameters is admitted per system. Other parameters, such as the listed set of different process information in command and in monitor direction allow the specification of the complete set or subsets, as appropriate for given applications. This Clause summarizes the parameters of the previous Clauses to facilitate a suitable selection for a specific application. If a system is composed of equipment stemming from different manufacturers, it is necessary that all partners agree on the selected parameters.

Designation:

☐ - Function or ASDU is not used;

☒ - Function or ASDU is used as standardized (default);

R - Function or ASDU is used in reverse mode;

B - Function or ASDU is used in standard and reverse mode/

The possible selection (blank, X, R, or B) is specified for each specific Clause or parameter.

1. System or device

(system-specific parameter, indicate the definition of a system or a device by marking one of the following with an «X»)

IEC 60870-5-101		IEC 60870-5-104	
☐	System definition	☐	System definition
☐	Controlling station definition (master)	☐	Controlling station definition (master)
☒	Controlled station definition (slave)	☐	Controlled station definition (slave)

2. Network configuration

IEC 60870-5-101			
☒	Point-to-point	☐	Multipoint-partyline
☒	Multiple point-to-point	☐	Multipoint-star

IEC 60870-5-104	
~~■ Point-to-point~~ ~~■ Multiple point-to-point~~	~~■ Multipoint-partyline~~ ~~■ Multipoint-star~~

3. Physical layer

(network-specific parameter, all interfaces and data rates that are used are to be marked with an «X»)

Transmission speed (control direction)

IEC 60870-5-101		
Unbalanced interchange circuit V.24/V.28 Standard	Unbalanced interchange circuit V.24/V.28 recommended if >1200 bit/s	Balanced interchange circuit X.24/X.27
☐ 100bit/s ☐ 200bit/s ☐ 300bit/s ☒ 600bit/s ☒ 1200bit/s	☒ 2400bit/s ☒ 4800bit/s ☒ 9600bit/s ☒ 19200bit/s ☒ 38400 bit/s ☒ 57600 bit/s ☒ 115200 bit/s	☐ 2400bit/s ☐ 4800bit/s ☐ 9600bit/s ☐ 19200bit/s ☐ 38400bit/s ☐ 56000bit/s ☐ 64000bit/s

IEC 60870-5-104		
Unbalanced interchange circuit V.24/V.28 Standard	Unbalanced interchange circuit V.24/V.28 recommended if >1200 bit/s	Balanced interchange circuit X.24/X.27
~~■ 100bit/s~~ ~~■ 200bit/s~~ ~~■ 300bit/s~~ ~~■ 600bit/s~~ ~~■ 1200bit/s~~	~~■ 2400bit/s~~ ~~■ 4800bit/s~~ ~~■ 9600bit/s~~	~~■2400bit/s~~ ~~■38400bit/s~~ ~~■4800bit/s~~ ~~■56000bit/s~~ ~~■9600bit/s~~ ~~■64000bit/s~~ ~~■19200bit/s~~

Transmission speed (monitor direction)

IEC 60870-5-101		
Unbalanced interchange circuit V.24/V.28 Standard	Unbalanced interchange circuit V.24/V.28 recommended if >1200 bit/s	Balanced interchange circuit X.24/X.27
☐ 100bit/s ☐ 200bit/s ☐ 300bit/s ☒ 600bit/s ☒ 1200bit/s	☒ 2400bit/s ☒ 4800bit/s ☒ 9600bit/s ☒ 19200bit/s ☒ 38400 bit/s ☒ 57600 bit/s ☒ 115200 bit/s	☐ 2400bit/s ☐ 4800bit/s ☐ 9600bit/s ☐ 19200bit/s ☐ 38400bit/s ☐ 56000bit/s ☐ 64000bit/s

IEC 60870-5-104		
Unbalanced interchange circuit V.24/V.28 Standard	Unbalanced interchange circuit V.24/V.28 recommended if >1200 bit/s	Balanced interchange circuit X.24/X.27

~~■ 100bit/s~~ ~~■ 200bit/s~~ ~~■ 300bit/s~~ ~~■ 600bit/s~~ ~~■ 1200bit/s~~	~~■ 2400bit/s~~ ~~■ 4800bit/s~~ ~~■ 9600bit/s~~	~~■2400bit/s~~ ~~■4800bit/s~~ ~~■9600bit/s~~ ~~■19200bit/s~~	~~■38400bit/s~~ ~~■56000bit/s~~ ~~■64000bit/s~~

4. Link layer

Network-specific parameter, all options that are used are to be marked with an "×". Specify the maximum frame length. If a non-standard assignment of class 2 messages is implemented for unbalanced transmission, indicate the type ID and COT of all messages assigned to class 2.

IEC 60870-5-101

Frame format FT 1.2, single character 1 and the fixed time out interval are used exclusively in this companion standard.

Link transmission procedure	Address field of the link
☐ Balanced transmission ☒ Unbalanced transmission	☐ Not present (balanced transmission only) ☒ One octet ☐ Two octets ☐ Structured ☒ Unstructured
Frame length 255 Maximum length L (control direction) 255 Maximum length L (monitor direction) 5 - repetitions Time during which repetitions are permitted (Trp) or number of repetitions	

When using an unbalanced link layer, the following ASDU types are returned in class 2 messages (low priority) with the indicated causes of transmission:

☐ The standard assignment of ASDUs to class 2 messages is used as follows:

Type identification	Cause of transmission

☒ A special assignment of ASDUs to class 2 messages is used as follows:

Type identification	Cause of transmission
1, 3, 11, 13, 15, 30, 31, 35, 36,37	<3>

~~NOTE: In response to a class 2 poll, a controlled station may respond with class 1 data when there is no class 2 data available.~~

IEC 60870-5-104

Frame format FT 1.2, single character 1 and the fixed time out interval are used exclusively in this companion standard.

Link transmission procedure	Address field of the link
■ ~~Balanced transmission~~ ■ ~~Unbalanced transmission~~	■ ~~Not present (balanced transmission only)~~ ■ ~~One octet~~ ■ ~~Two octets~~ ■ ~~Structured~~ ■ ~~Unstructured~~
Frame length ■ ~~Maximum length L~~	

When using an unbalanced link layer, the following ASDU types are returned in class 2 messages (low priority) with the indicated causes of transmission:

■ ~~The standard assignment of ASDUs to class 2 messages is used as follows:~~

Type identification	Cause of transmission

■ ~~A special assignment of ASDUs to class 2 messages is used as follows:~~

Type identification	Cause of transmission

5. Application layer

Transmission mode for application data Mode 1 (least significant octet first), as defined in 4.10 of IEC 60870-5-4, is used exclusively in this companion standard.

Common address of ASDU

(system-specific parameter, all configurations that are used are to be marked with an X).

IEC 60870-5-101	**IEC 60870-5-104**
☒ One octet ☒ Two octets	■ ~~One octet~~ ■ Two octets

Information object address

(system-specific parameter, all configurations that are used are to be marked with an X).

IEC 60870-5-101	
☐ One octet	☒ Structured
☒ Two octets	☒ Unstructured
☒ Three octets	

IEC 60870-5-104	
■ One octet	☐ Structured
■ Two octets	B Unstructured
☒ Three octets	

Cause of transmission

(system-specific parameter, all configurations that are used are to be marked with an X).

IEC 60870-5-101	
☒ One octet	☒ Two octets (with originator address)

IEC 60870-5-104	
■ ~~One octet~~	☒ Two octets (with originator address)

Originator address is set to zero if not used

Selection of standard ASDUs

Process information in monitor direction

Type identification and cause of transmission assignments

((station-specific parameters).

IEC 60870-5-104																	
Type identification		Cause of transmission															
		1	2	3	4	5	6	7	8	9	10	11	12	13	20-36	37-41	44-47
<1>	M_SP_NA_1			X											X		
<2>	M_SP_TA_1																
<3>	M_DP_NA_1																
<4>	M_DP_TA_1																
<5>	M_ST_NA_1																
<6>	M_ST_TA_1																
<7>	M_BO_NA_1																
<8>	M_BO_TA_1																
<9>	M_ME_NA_1																
<10>	M_ME_TA_1																
<11>	M_ME_NB_1			X											X		
<12>	M_ME_TB_1																
<13>	M_ME_NC_1																
<14>	M_ME_TC_1																
<15>	M_IT_NA_1																
<16>	M_IT_TA_1																
<17>	M_EP_TA_1																
<18>	M_EP_TB_1																
<19>	M_EP_TC_1																
<20>	M_PS_NA_1																
<21>	M_ME_ND_1																
<30>	M_SP_TB_1			X													
<31>	M_DP_TB_1																
<32>	M_ST_TB_1																
<33>	M_BO_TB_1																
<34>	M_ME_TD_1																
<35>	M_ME_TE_1			X													
<36>	M_ME_TF_1																

IEC 60870-5-104																	
Type identification		Cause of transmission															
		1	2	3	4	5	6	7	8	9	10	11	12	13	20-36	37-41	44-47
<37>	M_ME_TF_1																
<38>	M_EP_TD_1																
<39>	M_IT_TB_1																
<40>	M_EP_TD_1																
<45>	C_SC_NA_1						R	R	R	R	R						R
<46>	C_DC_NA_1						R	R	R	R	R						R
<47>	C_RC_NA_1																
<48>	C_SE_NA_1																
<49>	C_SE_NB_1																
<50>	C_SE_NC_1																
<51>	C_BO_NA_1																
<70>	M_EI_NA_1																
<100>	C_IC_NA_1						R	R	R	R	R						
<101>	C_CI_NA_1						R	R			R						
<102>	C_RD_NA_1					R											R
<103>	C_CS_NA_1						R	R									R
<104>	C_TS_NA_1																
<105>	C_RP_NA_1																
<106>	C_CD_NA_1																
<110>	P_ME_NA_1																
<111>	P_ME_NB_1																
<112>	P_ME_NC_1																
<113>	P_AC_NA_1																
<120>	F_FR_NA_1													X			
<121>	F_SR_NA_1													X			
<122>	F_SC_NA_1													X			
<123>	F_LS_NA_1													X			
<124>	F_AF_NA_1													X			
<125>	F_CG_NA_1													X			
<126>	F_DR_TA_1																

IEC 60870-5-101																	
Type identification		Cause of transmission															
		1	2	3	4	5	6	7	8	9	10	11	12	13	20-36	37-41	44-47
<1>	M_SP_NA_1			X											X		
~~<2>~~	~~M_SP_TA_1~~																
<3>	M_DP_NA_1																
~~<4>~~	~~M_DP_TA_1~~																
<5>	M_ST_NA_1																
~~<6>~~	~~M_ST_TA_1~~																
<7>	M_BO_NA_1																
~~<8>~~	~~M_BO_TA_1~~																
<9>	M_ME_NA_1																
~~<10>~~	~~M_ME_TA_1~~																
<11>	M_ME_NB_1			X											X		
~~<12>~~	~~M_ME_TB_1~~																
<13>	M_ME_NC_1																

IEC 60870-5-101																	
Type identification		Cause of transmission															
		1	2	3	4	5	6	7	8	9	10	11	12	13	20-36	37-41	44-47
~~<14>~~	~~M_ME_TC_1~~																
<15>	M_IT_NA_1																
~~<16>~~	~~M_IT_TA_1~~																
~~<17>~~	~~M_EP_TA_1~~																
~~<18>~~	~~M_EP_TB_1~~																
~~<19>~~	~~M_EP_TC_1~~																
<20>	M_PS_NA_1																
<21>	M_ME_ND_1																
<30>	M_SP_TB_1			X													
<31>	M_DP_TB_1																
<32>	M_ST_TB_1																
<33>	M_BO_TB_1																
<34>	M_ME_TD_1																
<35>	M_ME_TE_1			X													
<36>	M_ME_TF_1																
<37>	M_ME_TF_1																
<38>	M_EP_TD_1																
<39>	M_IT_TB_1																
<40>	M_EP_TD_1																
<45>	C_SC_NA_1						R	R	R	R	R						R
<46>	C_DC_NA_1						R	R	R	R	R						R
<47>	C_RC_NA_1																
<48>	C_SE_NA_1																
<49>	C_SE_NB_1																
<50>	C_SE_NC_1																
<51>	C_BO_NA_1																
<70>	M_EI_NA_1																
<100>	C_IC_NA_1						R	R	R	R	R						
<101>	C_CI_NA_1						R	R			R						
<102>	C_RD_NA_1					R											R
<103>	C_CS_NA_1						R	R									R
~~<104>~~	~~C_TS_NA_1~~																
<105>	C_RP_NA_1																
~~<106>~~	~~C_CD_NA_1~~																
<110>	P_ME_NA_1																
<111>	P_ME_NB_1																
<112>	P_ME_NC_1																
<113>	P_AC_NA_1																
<120>	F_FR_NA_1													X			
<121>	F_SR_NA_1													X			
<122>	F_SC_NA_1													X			
<123>	F_LS_NA_1													X			
<124>	F_AF_NA_1													X			
<125>	F_CG_NA_1													X			
<126>	F_DR_TA_1																

6. Basic application functions

Station initialization

☐ Remote initialization

Cyclic data transmission

☒ Cyclic data transmission

Read procedure

☐ Read procedure

Spontaneous transmission

☒ Spontaneous transmission

Double transmission of information objects with cause of transmission spontaneous

(station-specific parameter, mark each information type with an “X” where both a type ID without time and corresponding type ID with time are issued in response to a single spontaneous change of a monitored object) The following type identifications may be transmitted in succession caused by a single status change of an information object. The particular information object addresses for which double transmission is enabled are defined in a project-specific list.

☐ Single-point information M_SP_NA_1, M_SP_TA_1, M_SP_TB_1,

M_PS_NA_1

☐ Double-point information M_DP_NA_1, M_DP TA 1, M_DP_TB_1

☐ Step position information M_ST_NA_1, M_ST_TA_1, M_ST_TB_1

☐ Bitstring of 32 bit M_BO_NA_1, M_BO_TA_1, M_BO_TB_1 (if defined for a specific project, see 7.2.1.1)

☐ Measured value, normalized value M_ME_NA_1, M_ME_TA_1, M_ME_ND_1, M_ME_TD_1

☐ Measured value, scaled value M_ME_NB_1, M_ME_TB_1, M_ME_TE_1

☐ Measured value, short floating point number M_ME_NC_1, M_ME_TC_1, M_ME_TF_1

Station interrogation

☒ – Global

☒ – Group 1 ☐ – Group 7 ☐ – Group 13

☐ – Group 2 ☐ – Group 8 ☐ – Group 14

☐ – Group 3 ☐ – Group 9 ☐ – Group 15

☐ – Group 4 ☐ – Group 10 ☐ – Group 16

☐ – Group 5 ☐ – Group 11 ☐ – Information object addresses assigned to each group are configurable

☐ – Group 6 ☐ – Group 12

Clock synchronization

☒ – Clock synchronization

Command transmission

☒ Direct command transmission

☐ Direct set point command transmission

☒ Select and execute command

☐ Select and execute set point command

☐ C_SE ACTTERM used

☐ No additional definition

☒ Short-pulse duration (1 sec.)
☒ Long-pulse duration (1 sec.)
☒ Persistent output (255 sec.)

Transmission of integrated totals

☐ Mode A: local freeze with spontaneous transmission

☐ Mode B: local freeze with counter interrogation

☐ Mode C: freeze and transmit by counter interrogation commands

☐ Mode D: freeze by counter-interrogation command, frozen values reported spontaneously

☐ Counter read

☐ Counter freeze without reset

☐ Counter freeze with reset

☐ Counter reset

☒ – Clock synchronization
☒ – Request counter group 1

☐ Request counter group 2

☐ Request counter group 3

☐ Request counter group 4

Parameter loading

☐ Threshold value

☐ Smoothing factor

☐ Low limit for transmission of measured value

☐ High limit for transmission of measured

Parameter activation

☐ Act/deact of persistent cyclic or periodic transmission of the addressed object

Test procedure

☐ Test procedure

File transfer

File transfer in monitor direction

☒ Transparent file

☐ Transmission of disturbance data of protection equipmen

☐ Transmission of sequences of events

☐ Transmission of sequences of recorded analogue values

File transfer in control direction

☐ Transparent file

Background scan

☒ Background scan

For IEC 60870-5-104 only:

Definition of time outs

Parameter	Default value	Remarks	Selected value
t_0	30 s	Time-out of connection establishment	
t_1	15 s	Time-out of send or test APDUs	15
t_2	10 s	Time-out for acknowledges in case of no data messages t2 < t1	10
t_3	20 s	Time-out for sending test frames in case of a long idle state	20

Maximum range for timeouts t0 to t2: 1 s to 255 s, accuracy 1 s.

Maximum number of outstanding I format APDUs k and latest acknowledge APDUs (w):

Parameter	Default value	Remarks
K	1 APDU	Maximum difference receive sequence number to send state variable
W	1 APDU	Latest acknowledge after receiving w I format APDUs

K and W are not change.

Port number

Parameter	Value	Remarks
Port number	2404	In all cases

IP settings

	IP address	ASDU address
ENIP-2 default	192.168.0.10	
Socket №1	-	1
Socket №2	-	1
Socket №3	-	1
Socket №4	-	1

Default register's addresses

	ENMV-1-24/0, ENMV-1-0/22, ENMV-1-0/20		
Parameter	Address	ASDU	Time of cycle, sec
Digital input/output 1 (DIO1)	1	30	10
Digital input/output 2 (DIO2)	2	30	10
Digital input/output 3 (DIO3)	3	30	10
Digital input/output 4 (DIO4)	4	30	10
Digital input/output 5 (DIO5)	5	30	10
Digital input/output 6 (DIO6)	6	30	10
Digital input/output 7 (DIO7)	7	30	10
Digital input/output 8 (DIO8)	8	30	10
…	…	…	…
Digital input/output 64 (DIO64)	64	30	10

Parameter		**ENMV-1-4(0)/3**		
		Address	ASDU type	
			(spontaneous)	(general interrogation)
Digital output	DO1	1	M_SP_TB_1 (30)	M_SP_NA_1 (1)
	DO2	2		
	DO3	3		
Digital input	DI1	4		
	DI2	5		
	DI3	6		
	DI4	7		

Appendix C. ENMV-1: Modbus

About Modbus

Modbus (Schneider Electric trademark) is a serial communications protocol. Full description see on www.modbus.org. This protocol is used for data communication via RS-485 or Ethernet interfaces.

Address

Available addresses of ENMV-1 from 01 to 254 (h01-hFE). h00 and hFF are multicast addresses. Any device in network responds to the request with address h00. Any device in network execute only writing command to the request with address hFF.

Available function codes

h01 read coil;

h05 write single coil;

h14 read file record

h15 force multiple coils;

Service function codes

h64 service read;

h65 service write.

Exception codes

01 – illegal function

02 – illegal data address

03 – illegal data value

04 – slave device failure

Discrete

Discrete addresses range is 0 to 59999. You can change the addressing of values using «ES Configurator».

Any DIO is configured independently.

Default configuration:

ENMV-1-24/0-X-X				
MODBUS address		Data type	Description	Read/write
				ENMV-1-24/0
00	0x00h	Coil	DI1	R
01	0x01h	Coil	DI2	R
02	0x02h	Coil	DI3	R
03	0x03h	Coil	DI4	R
04	0x04h	Coil	DI5	R
05	0x05h	Coil	DI6	R
06	0x06h	Coil	DI7	R
07	0x07h	Coil	DI8	R
08	0x08h	Coil	DI9	R
09	0x09h	Coil	DI10	R
10	0x0Ah	Coil	DI11	R
11	0x0Bh	Coil	DI12	R
12	0x0Ch	Coil	DI13	R
13	0x0Dh	Coil	DI14	R
14	0x0Eh	Coil	DI15	R
15	0x0Fh	Coil	DI16	R
16	0x10h	Coil	DI17	R
17	0x11h	Coil	DI18	R
18	0x12h	Coil	DI19	R
19	0x13h	Coil	DI20	R
20	0x14h	Coil	DI21	R
21	0x15h	Coil	DI22	R
22	0x16h	Coil	DI23	R
23	0x17h	Coil	DI24	R

ENMV-1-16/6-X-X, ENMV-1-16/3R-X-X					
MODBUS address		Data type	Description	Read/write	
				ENMV-1-16/6	ENMV-1-16/3R
00	0x00h	Coil	DI1	R	R
01	0x01h	Coil	DI2	R	R
02	0x02h	Coil	DI3	R	R
03	0x03h	Coil	DI4	R	R
04	0x04h	Coil	DI5	R	R
05	0x05h	Coil	DI6	R	R
06	0x06h	Coil	DI7	R	R
07	0x07h	Coil	DI8	R	R
08	0x08h	Coil	DI9	R	R
09	0x09h	Coil	DI10	R	R
10	0x0Ah	Coil	DI11	R	R
11	0x0Bh	Coil	DI12	R	R
12	0x0Ch	Coil	DI13	R	R
13	0x0Dh	Coil	DI14	R	R
14	0x0Eh	Coil	DI15	R	R
15	0x0Fh	Coil	DI16	R	R
16	0x10h	Coil	DO1	R/W	R/W
17	0x11h	Coil	DO2	R/W	R/W

18	0x12h	Coil	DO3	R/W	R/W
19	0x13h	Coil	DO4	R/W	-
20	0x14h	Coil	DO5	R/W	-
21	0x15h	Coil	DO6	R/W	-

ENMV-1-0/22-X-X, ENMV-1-0/20-X-X					
MODBUS address		Data type	Description	Read/write	
				ENMV-1-0/22	ENMV-1-0/20
00	0x00h	Coil	DO1	R/W	R/W
01	0x01h	Coil	DO2	R/W	R/W
02	0x02h	Coil	DO3	R/W	R/W
03	0x03h	Coil	DO4	R/W	R/W
04	0x04h	Coil	DO5	R/W	R/W
05	0x05h	Coil	DO6	R/W	R/W
06	0x06h	Coil	DO7	R/W	R/W
07	0x07h	Coil	DO8	R/W	R/W
08	0x08h	Coil	DO9	R/W	R/W
09	0x09h	Coil	DO10	R/W	R/W
10	0x0Ah	Coil	DO11	R/W	R/W
11	0x0Bh	Coil	DO12	R/W	R/W
12	0x0Ch	Coil	DO13	R/W	R/W
13	0x0Dh	Coil	DO14	R/W	R/W
14	0x0Eh	Coil	DO15	R/W	R/W
15	0x0Fh	Coil	DO16	R/W	R/W
16	0x10h	Coil	DO17	R/W	R/W
17	0x11h	Coil	DO18	R/W	R/W
18	0x12h	Coil	DO19	R/W	R/W
19	0x13h	Coil	DO20	R/W	R/W
20	0x14h	Coil	DO21	R/W	-
21	0x15h	Coil	DO22	R/W	-

ENMV-1-0/3R-X-A1, ENMV -1-4/3R-X-A1					
MODBUS address		Data type	Description	Read/write	
				ENMV-1-0/3R	ENMV-1-4/3R
00	0x00h	Coil	DO1	R/W	R/W
01	0x01h	Coil	DO2	R/W	R/W
02	0x02h	Coil	DO3	R/W	R/W
03	0x03h	Coil	DI1	-	R
04	0x04h	Coil	DI2	-	R
05	0x05h	Coil	DI3	-	R
06	0x06h	Coil	DI4	-	R

Function code	Command text	Description
01 hex	Read coils	Reads the status of single bit(s) in a slave
05 hex	Write single coil	Writes a single on/off bit
15* hex	Write multiple coils	Writes a multiple on/off bits

* Function code h15 only for ENMV-1-0/20 and ENMV-1-0/22. There are available writing only one bit per each command (like h05 function code).

Request example for function code 1 if ENIP-2 have slave address 1, DIO requested from 2 to 13

Slave address	Function code	Data address of the first coil		Number of coil		CRC	
01	01	00	01	00	0C	9D	CF

Answer example

01	01	02	00	51	78

Second and third byte describe DIO status

byte	02								00							
bit	0	0	0	0	0	0	1	0	0	0	0	0	0	0	0	0
DIO	9	8	7	6	5	4	3	2					13	12	11	10

Appendix D. ENMV-1: IEC 61850

Attention! Availability of IEC61850 is determined when ordering (see option ES61850.enmv in our price). In the future, you can purchase the activation and activate IEC61850 yourself.

Table D.1.1 – Basic conformance statement

		Client/ subscriber	Server/ publisher	Value/ comments
Client-server roles				
B11	**Server** side (of TWO-PARTY APPLICATION-ASSOCIATION)		●	
B12	**Client** side of (TWO-PARTY APPLICATION-ASSOCIATION)			
SCSMs supported				
B21	SCSM: IEC 61850-8-1 used		●	
B22	SCSM: IEC 61850-9-1 used			
B23	SCSM: IEC 61850-9-2 used			
B24	SCSM: other			
Generic substation event model (GSE)				
B31	**Publisher** side		●	
B32	**Subscriber** side	●		
Transmission of sampled value model (SVC)				
B41	**Publisher** side			
B42	**Subscriber** side			

● – available services

Table D.1.2 – ACSI models conformance statement

		Client/ subscriber	Server/ publisher	Value/ comments
If Server side (B11) supported				
M1	**Logical device**		●	
M2	**Logical node**		●	
M3	**Data**		●	
M4	**Data set**		●	
M5	**Substitution**			
M6	**Setting group control**			
	Reporting			
M7	**Buffered report control**		●	
M7-1	sequence-number		●	
M7-2	report-time-stamp		●	
M7-3	reason-for-inclusion		●	
M7-4	data-set-name		●	

		Client/ subscriber	Server/ publisher	Value/ comments
M7-5	data-reference		●	
M7-6	buffer-overflow		●	
M7-7	entryID		●	
	conf_revision		●	
M7-8	BufTm		●	BufTm = 0
M7-9	IntgPd		●	
M7-10	GI		●	
M8	**Unbuffered report control**		●	
M8-1	sequence-number		●	
M8-2	report-time-stamp		●	
M8-3	reason-for-inclusion		●	
M8-4	data-set-name		●	
M8-5	data-reference		●	
	conf_revision		●	
M8-6	BufTm		●	BufTm = 0
M8-7	IntgPd		●	
M8-8	GI		●	
	Logging			
M9	**Log control**			
M9-1	IntgPd			
M10	**Log**			
M11	**Control**			
If GSE (B31/B32) is supported				
	GOOSE			
M12-1	entryID			
M12-2	DataRefInc			
M13	**GSSE**			
If SVC (B41/B42) is supported				
M14	Multicast SVC			
M15	Unicast SVC			
M16	**Time**			
M17	**File Transfer**			

● – available services

Table D.1.3 – ACSI service conformance statement

Services		AA: TP/MC	Client/ subscriber	Server/ publisher	Comments
Server (Clause 6)					
S1	Server Directory	TP		●	

Application association (Clause 7)					
S2	Associate			●	

Services		AA: TP/MC	Client/ subscriber	Server/ publisher	Comments
S3	Abort			●	
S4	Release			●	

Logical device (Clause 8)					
S5	LogicalDeviceDirectory	TP		●	

Logical node (Clause 9)					
S6	LogicalNodeDirectory	TP		●	
S7	GetAllDataValues	TP		●	

Data (Clause 10)					
S8	GetDataValues	TP		●	
S9	SetDataValues	TP		●	
S10	GetDataDirectory	TP		●	
S11	GetDataDefinition	TP		●	

Data set (Clause 11)					
S12	GetDataSetValues	TP		●	
S13	SetDataSetValues	TP		●	
S14	CreateDataSet	TP		●	
S15	DeleteDataSet	TP		●	
S16	GetDataSetDirectory	TP		●	

Substitution (Clause 12)					
S17	SetDataValues	TP			

Setting group control (Clause 13)					
S18	SelectActiveSG	TP			
S19	SelectEditSG	TP			
S20	SetSGValues	TP			
S21	ConfirmEditSGValues	TP			
S22	GetSGValues	TP			
S23	GetSGCBValues	TP			

Reporting (Clause 14)					
Buffered report control block (BRCB)					
S24	Report	TP		●	
S24-1	data-change (dchg)			●	
S24-2	qchg-change (qchg)			●	
S24-3	data-update (dupd)			●	
S25	GetBRCBValues	TP		●	
S26	SetBRCBValues	TP		●	
Unbuffered report control block (URCB)					
S27	Report	TP		●	

Services		AA: TP/MC	Client/ subscriber	Server/ publisher	Comments
S27-1	data-change (dchg)			●	
S27-2	qchg-change (qchg)			●	
S27-3	data-update (dupd)			●	
S28	GetURCBValues	TP		●	
S29	SetURCBValues	TP		●	

Logging (Clause 14)					
Log control block					
S30	GetLCBValues	TP			
S31	SetLCBValues	TP			
Log					
S32	QueryLogByTime	TP			
S33	QueryLogAfter	TP			
S34	GetLogStatusValues	TP			

Generic substation event model (GSE) (14.3.5.3.4)					
GOOSE-CONTROL-BLOCK					
S35	SendGOOSEMessage	MC		●	
S36	GetGoReference	TP			
S37	GetGOOSEElementNumber	TP			
S38	GetGoCBValues	TP		●	
S39	SetGoCBValues	TP		●	
GSSE-CONTROL-BLOCK					
S40	SendGSSEMessage	MC			
S41	GetGsReference	TP			
S42	GetGSSEElementNumber	TP			
S43	GetGsCBValues	TP			
S44	SetGsCBValues	TP			

Transmission of sampled value model (SVC) (Clause 16)					
Multicast SVC					
S45	SendMSVMessage	MC			
S46	GetMSVCBValues	TP			
S47	SetMSVCBValues	TP			
Unicast SVC					
S48	SendUSVMessage	TP			
S49	GetUSVCBValues	TP			
S50	SetUSVCBValues	TP			

Control (17.5.1)					
S51	Select	TP			
S52	SelectWithValue	TP		●	
S53	Cancel	TP		●	

Services		AA: TP/MC	Client/ subscriber	Server/ publisher	Comments
S54	Operate	TP		●	
S55	CommandTermination	TP		●	
S56	TimeActivated-Operate	TP			

File transfer (Clause 20)					
S57	GetFile	TP			
S58	SetFile	TP			
S59	DeleteFile	TP			
S60	GetFileAttributeValues	TP			

Time (Clause 18)					
T1	Time resolution of internal clock	TP		1 ms	
T2	Time accuracy of internal clock	TP		1 ms	
T3	Supported TimeStamp resolution	TP		1 ms	

● – available services

Mandatory tissues

Table D.1.4

Part	Tissue #	Technical Issue Subject	Applied/Yes/ Not applied
8-1	116	GetNameList with empty response?	Yes
	165	Improper Error Response for GetDataSetValues	Yes
	183	GetNameList error handling	Yes
	246	Control negative response	Not applied
	545	FIle directories	Not applied
7-4			
7-3	28	Definition of APC	Not applied
	54	Point def xVal, not cVal	Not applied
	55	Ineut = Ires ?	Not applied
	63	mag in CDC CMV	Yes
	219	operTm in ACT	Not applied
	270	WYE and DEL rms values	Yes
7-2	30	control parameter T	Yes
	31	Typo	Not applied
	32	Typo in syntax	Not applied
	35	Typo Syntax Control time	Not applied
	36	Syntax parameter DSet-Ref missing	Not applied
	37	Syntax GOOSE "T" type	Yes
	39	Add DstAddr to GoCB	Yes
	40	GOOSE Message “AppID” to “GoID”	Yes
	41	GsCB “AppID” to “GsID”	Not applied
	42	SV timestamp: “EntryTime” to “TimeStamp"	Not applied
	43	Control "T" semantic	Not applied
	44	AddCause - Object not sel	Yes
	45	Missing AddCauses	Yes
	46	Synchro check cancel	Yes
	47	"." in LD Name?	Yes
	49	BRCB TimeOfEntry? (part of #453)	-
	50	LNName start with number?	Yes
	51	ARRAY [0..num] missing	Yes
	52	Ambiguity GOOSE SqNum	Yes
	53	Add DstAddr to GsCB, SV	Not applied
	151	Name constraint for control blocks etc.	Yes
	166	DataRef attribute in Log	Not applied
	185	Logging - Integrity periode	Not applied
	189	SV Format	Not applied
	190	BRCB: EntryId and TimeOfEntry	-
	191	BRCB: Integrity and buffering reports (part of #453)	-
	275	Confusing statement on GI usage (part of #453)	-
	278	EntryId not valid for a server (part of #453)	-
	297	Sequence number (part of #453)	-

	298	Type of SqNum	Yes
	305	Reporting with BufTm=0 (part of #453)	Yes
	322	Write Configuration attribute of BRCBs (part of #453)	-
	329	Reporting and BufOvl (part of #453)	-
	333	Enabling of an incomplet GoCB	Yes
	335	Clearing of Bufovfl (part of #453)	-
	348	URCB class and report (part of #453)	-
	349	BRCB TimeOfEntry has two definitions (part of #453)	-
	453	Reporting & Logging model revision	Yes
6	1	Syntax	Yes
	5	tExtensionAttributeNameEnum is restricted	Yes
	8	SIUnit enumeration for W	Not applied
	10	Base type for bitstring usage	Yes
	17	DAI/SDI elements syntax	Yes
	169	Ordering of enum differs from 7-3	Not applied
	249	Mapping of CODED ENUM	Yes
	529	sev	Yes

Notice: Tissue 49, 190, 191, 275, 278, 297, 305, 322, 329, 333, 335, 348 and 349 are parts of optional tissue # 453.

Other tissues completed

Table D.1.5

Part	Tissue #	Описание
7-2	333	Enabling of an incomplet GoCB
7-2	322	Write Configuration attribute of BRCBs
8-1	177	Ignoring OptFlds bits for URCB

Appendix F. ENMV-1: SNMP

In according with SNMPv1 ENMV-1 can transmit following Management Information Base (MIB) (*.mib file for ENMV-1 you can download here):

Community: all

public

MIB-object	Description	Value
SysDescr.0	Device name	Intelligent electronic device ENMV1
SysUpTime.0	Time after start	XX hours, XX minutes, XX seconds
SysContact.0	Contact info	www.enip2.ru, ed@ens.ru, +7 (818-2) 64-60-00
SysName.0		ENMV-1-XX/XX-X-X
ifNumber.0	Number of interfaces	4
ifIndex1	The number of interface 1	1
ifIndex2	The number of interface 2	2
ifIndex3	The number of interface 3	3
ifIndex4	The number of interface 4	4
ifName1	Interface description 1	Eth0
ifName2	Interface description 2	rs485-1
ifName3	Interface description 3	rs485-2
ifName4	Interface description 4	USB
ifInOctets1	Receive octets via interface 1	
ifInOctets2	Receive octets via interface 2	
ifInOctets3	Receive octets via interface 3	
ifInOctets4	Receive octets via interface 4	
ifOutOctets1	Send octets via interface 1	
ifOutOctets2	Send octets via interface 2	
ifOutOctets3	Send octets via interface 3	
ifOutOctets4	Send octets via interface 4	
errorEth	No connection with Ethernet	1, if error
errorRTC	Clock error	1, if error
errorBAT	Low battery voltage	1, if error
errorAuth	Authorization error	1, if error
errorSync	Sync time error	1, if error
errorExt	External device error	1, if error
dio1	Status DIO1	
dio2	Status DIO2	
dio3	Status DIO3	
dio4	Status DIO4	
dio5	Status DIO5	
dio6	Status DIO6	
dio7	Status DIO7	
dio8	Status DIO8	

dio9	Status DIO9
dio10	Status DIO10
dio11	Status DIO11
dio12	Status DIO12
dio13	Status DIO13
dio14	Status DIO14
dio15	Status DIO15
dio16	Status DIO16
dio17	Status DIO17
dio18	Status DIO18
dio19	Status DIO19
dio20	Status DIO20
dio21	Status DIO21
dio22	Status DIO22
dio23	Status DIO23
dio24	Status DIO24
dio25	Status DIO25
dio26	Status DIO26
dio27	Status DIO27
dio28	Status DIO28
dio29	Status DIO29
dio30	Status DIO30
dio31	Status DIO31
dio32	Status DIO32
dio33	Status DIO33
dio34	Status DIO34
dio35	Status DIO35
dio36	Status DIO36
dio37	Status DIO37
dio38	Status DIO38
dio39	Status DIO39
dio40	Status DIO40
dio41	Status DIO41
dio42	Status DIO42
dio43	Status DIO43
dio44	Status DIO44
dio45	Status DIO45
dio46	Status DIO46
dio47	Status DIO47
dio48	Status DIO48
dio49	Status DIO49
dio50	Status DIO50
dio51	Status DIO51
dio52	Status DIO52
dio53	Status DIO53
dio54	Status DIO54
dio55	Status DIO55
dio56	Status DIO56
dio57	Status DIO57
dio58	Status DIO58
dio59	Status DIO59
dio60	Status DIO60
dio61	Status DIO61
dio62	Status DIO62

dio63	Status DIO63
dio64	Status DIO64

For transferring DIO states used SNMP traps. When DIO state changed, ENMV-1 will send data on IP address and port, which are defined in TCP client 1..4 ENMV-1 settings. There are must be selected “SNMP trap” protocol.