engineering center
energoservice

Multifunctional measuring transducer ENIP-2

Manual

ENIP.411187.002. Rev. 05.2023

Table of contents

Introduction

The Manual contains information about functions, recommendations for use, technical support, maintenance, packing, transportation, storage, as well as wiring diagrams to electrical grid, digital interfaces, digital I/O.

Read this manual carefully before using the device.

Typical users

Engineers, personnel involved in setting, operation and maintenance of the devices.

Validity range

This manual applies to all ENIP-2 modifications.

Support

If you have any questions about the device, please, contact with technical support of «Engineering center "Energoservice":

Web: http://www.enip2.com/support

Phone: +7 (8182) 65-75-65

E-mail: enip2@ens.ru

ATTENTION:
- Use ENIP-2 only as described in this manual;
- ENIP-2 should be installed, operated and maintained by qualified personnel only;
- Save ENIP-2 from impact;
- Before connecting ENIP-2, ensure that the local power supply conditions agree with the specifications on the label on the ENMU.

NOTICE:
- The information contained in this document is subject to change without notice;
- New features may be added to devices without notice.

Glossary and symbols

- AC – Alternating current
- ADC – Analog-to-digital converter
- DC – Direct current
- DI – Digital (binary) input
- DIO – Digital (binary) signal
- DO – Digital (binary) output
- EMC – Electromagnetic compatibility
- EMR – Electromagnetic relay
- PE – Protective earth
- PC – personal computer
- RTU – Remote Terminal Unit
- SCADA –Supervisory Control And Data Acquisition
- SSR – Solid-state relay

U_{L-L}(U_{AB}, U_{BC}, U_{CA}) – line-to-line voltage

U_{L-N}(U_A, U_B, U_C) - line-to-neutral voltage

I (I_A, I_B, I_C) – phase current

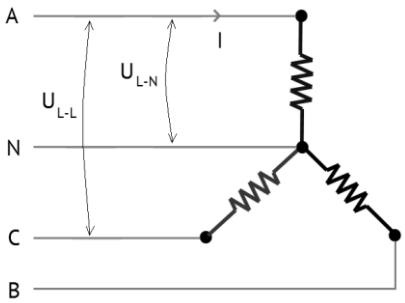

1 General information

ENIP-2 measures the full set of three-phase electrical grid parameters. It includes RMS of waveform combinations as well as the 1st harmonic parameters, e.g., effective voltage and current (each phase and line to line), active, reactive and apparent power (each phase and total), active and reactive energy import and export, power quality parameters. Digital input-output and programmable logic functionality enables it to play major role in automation systems. ENIP-2 is able to exchange data via RS-485 (Modbus and IEC 60870-5-101 protocols) communication port or Ethernet (Modbus, IEC 60870-5-104 and IEC-61850 as an add-on option).

ENIP-2 is designed for use in SCADA and supervisory control centers of substations, power stations, ships, industrial mills, oil and gas production. It can transmit data directly to higher level of controlling system or through remote terminal unit (RTU), e.g., ENCS-3m, ENCM-3.

High performance, high-quality signal processing and the possibility of synchronous measurements of electrical grid parameters make ENIP-2 unique. High-quality measurements are achieved by using our own advanced signal processing algorithms. Moreover, ENIP-2 optionally supports IEC 61850 (MMS-server, GOOSE subscriber/publisher) and can serve as a basic control unit for digital substation.

ENIP-2 configuration is supposed to be defined by «ES Configurator» software (here). It allows to set required parameters for available interfaces and protocols and defining I/O configuration. For more information, see chapter 6.

ENIP-2 is multifunctional, repairable, restorable device. It is designed for continuous operation in industrial installations.

Manufacturer Engineering Center "Energoservice"
26 Kotlasskaya St., 163046 Arkhangelsk, RUSSIA
tel.: +7(8182)65-75-65

Electromagnetic compatibility certificate № E032/02

CE EN 61010-1:2010, EN 61000-4-3, EN 61000-4-4, EN 61000-4-5, 61000-4-6, 61000-4-8, 61000-4-11.

RoHS Directive 2011/65EUof the European Parliament and of the Council of 8 June 2011 on the restriction of the use of certain hazardous substances in electrical and electronic equipment.

Conformity

The following table contains standards and certification of device.

Safety			
	IEC 61010-1		
Certifications			
	CE		
EMC			
№	Standard	Level	Class
1	IEC 61000-6-5	-	-
2	IEC 61000-4-2	3	A
3	IEC 61000-4-3	3	A
4	IEC 61000-4-4	4	A
5	IEC 61000-4-5	4	A
6	IEC 61000-4-6	3	A
7	IEC 1000-4-8	5	A
8	IEC 1000-4-9	5	A
9	IEC 1000-4-10	5	A
10	IEC 61000-4-11	-	A
11	IEC 61000-4-29	-	A
12	IEC 61000-4-12	3*/4**	A
13	IEC 61000-4-13	3	A
14	IEC 61000-4-14	X (Special)***	A
15	IEC 61000-4-16	4	A
16	IEC 61000-4-17	3	A
17	IEC 61000-4-28	4	A
18	CISPR 22	-	A
19	CISPR 11	-	A-1
20	IEC 60255-5	-	-
*** Periodic interference 0.1 and 1 MHz;** **** Solitary interference 0.1 MHz;** ***** $\Delta U=\pm 0.2U_n$, U_n – nominal voltage.**			

2 Design, dimensions, naming convention

ENIP-2 devices are manufactured in two models: Standard and Compact.

2.1 ENIP-2-...-X1 (Standard)

It is ENIP-2 in plastic case housing for DIN-rail mounting.

There are four modifications of ENIP-2 Standard, differing in interfaces and additional inputs outputs:

Minimum – 1xRS-485

Terminals: measuring inputs, power inputs, USB, digital interface RS-485.

Figure 2.1. ENIP-2-4X/X-X-**A1E0-01**

Minimum plus – 2xRS-485, 8DI or 4DI/3DO or 4AO

Basic modification boasts an additional RS-485, as well as 8 digital inputs, or set of 4 digital inputs and 3 outputs, or 4 analog output.

Plus 4 digital inputs, 3 digital outputs

Plus 8 digital inputs

Figure 2.2 – ENIP-2-4X/X-X-**A2E0-11** and ENIP-2-4X/X-X-**A2E0-21**

Optimum – 3xRS-485, Ethernet 100Base-TX, 8DI or 4DI/3DO or 4AO

Extended modification has three RS-485 and one Ethernet 100Base-TX ports.

Figure 2.3. ENIP-2-4X/X-X-**A3E4-21** and ENIP-2-4X/X-X-**A2SFP4-21**

Maximum – 2xRS-485, 2xEthernet 100Base-TX or -FX, 8DI or 4DI/3DO or 4AO

Maximum modification has two RS-485 and two Ethernet ports with RSTP and PRP.

2 Ethernet 100Base-TX

2 Ethernet 100Base-FX

Figure 2.4. ENIP-2-4X/X-X-**A2E4x2(FX)-21**

ENIP-2-XX/X-X-XX-X1 dimensions see on fig. 2.5.

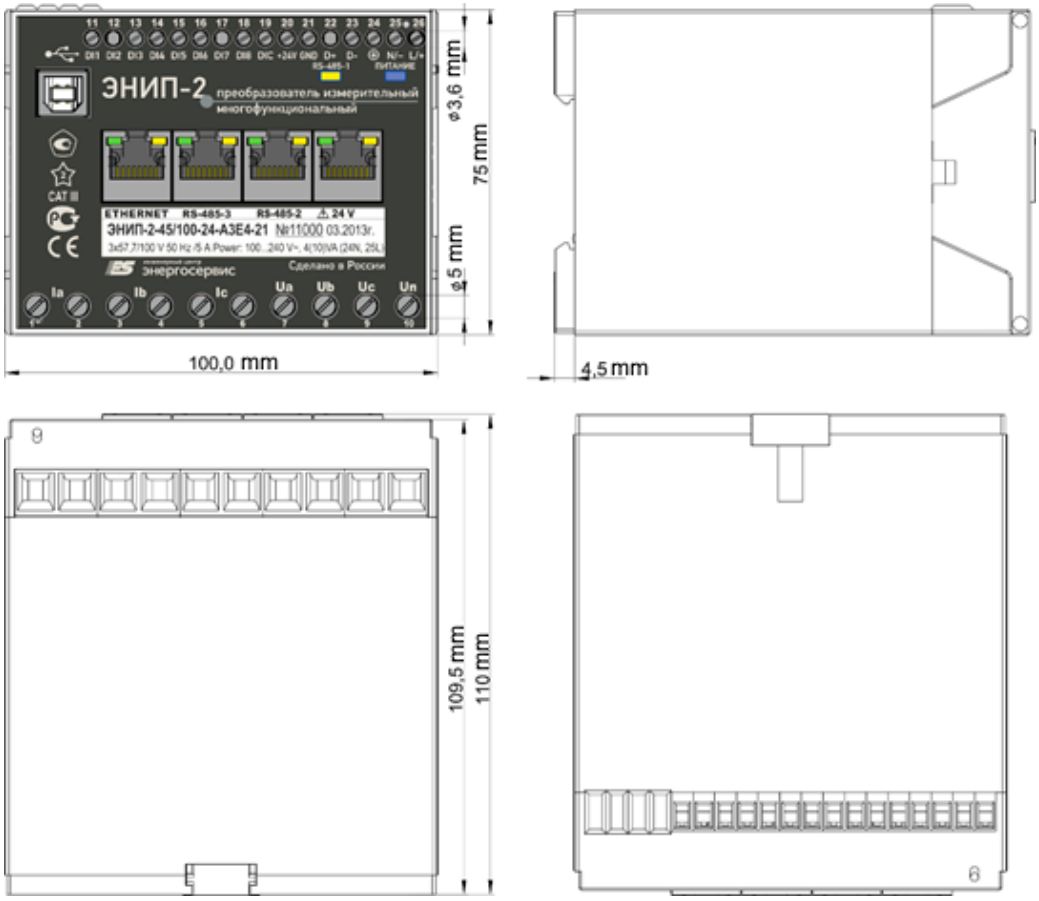

Figure 2.5. Dimensions of ENIP-2 Standard (ENIP-2-45/100-24-A3E4-21 front panel)

See the information below for ENIP-2 Standard ordering codes composing.

ENIP-2-4□/□-□-□□

Rated current

1 – 1 A
5 – 5 A

Rated voltage

100 – 57.7 (100) V
400 – 230 (400) V
690 – 400 (690) V

Power supply voltage

220 – 100...265 VAC (45...55 Hz) or 120...370 VDC
110 – 40...160 VDC
24 – 18...36 VDC

Digital inputs operating voltage

(220) – 220 VDC
(110) – 110 VDC
if not specified – 24 VDC

Interfaces and digital inputs/outputs

A1E0-01 – 1 × RS-485
A2E0-01 – 2 × RS-485
A2E0-11 – 2 × RS-485, 4 × DI, 3 × DO
A2E0-21 – 2 × RS-485, 8 × DI
A3E4-11 – 3 × RS-485, 1 × 100Base-TX, 4 × DI, 3 × DO
A3E4-21 – 3 × RS-485, 1 × 100Base-TX, 8 × DI
A2E4x2-11 – 2 × RS-485, 2 × 100Base-TX, 4 × DI, 3 × DO
A2E4x2-21 – 2 × RS-485, 2 × 100Base-TX, 8 × DI
A2E4x2FX-11 – 2 × RS-485, 2 × 100Base-FX, 4 × DI, 3 × DO
A2E4x2FX-21 – 2 × RS-485, 2 × 100Base-FX, 8 × DI

Interfaces and analog outputs

A2E0-41 – 2 × RS-485, 4 × AO
A3E4-41 – 3 × RS-485, 1 × 100Base-TX, 4 × AO
A2E4x2-41 – 2 × RS-485, 2 × 100Base-TX, 4 × AO
A2E4x2FX-41 – 2 × RS-485, 2 × 100Base-FX, 4 × AO

2.2 ENIP-2-...-32 (Compact)

It is in metal body for DIN-rail mounting or mounting with bracket (RM6-KP).

Figure 2.6. ENIP-2 Compact

ENIP-2 Compact has 12 DI, 3 DO, 2 RS-485, measuring inputs, voltage monitoring inputs. Power supply voltage is 18...36 V DC.

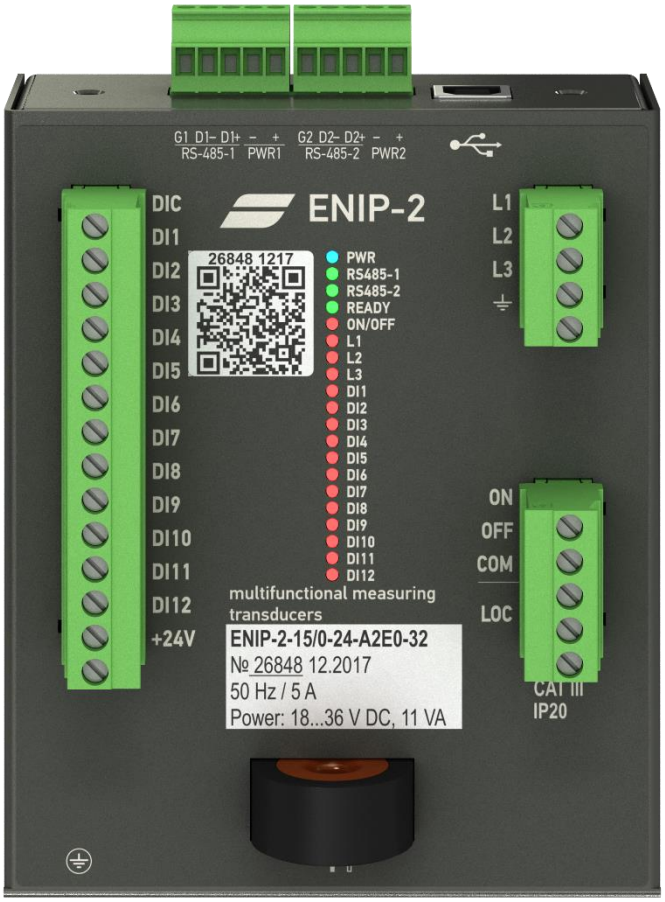

Figure 2.7. Modification of ENIP2 Compact - ENIP-2-1X/X...

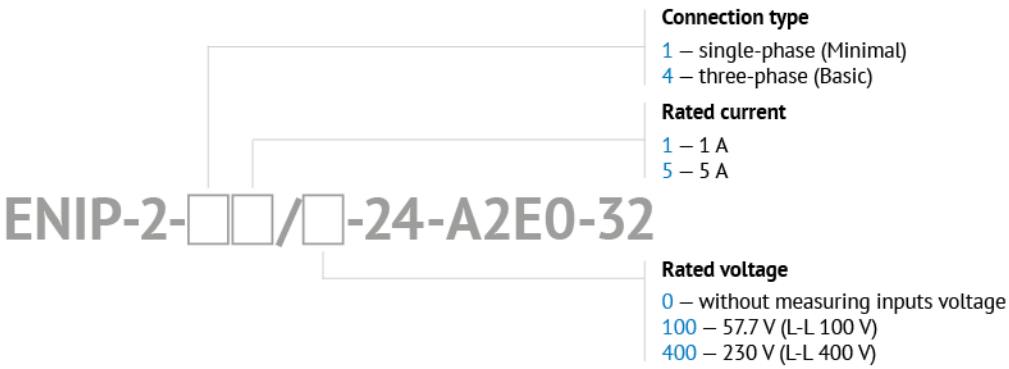

ENIP-2 Compact dimensions see on fig. 2.8.

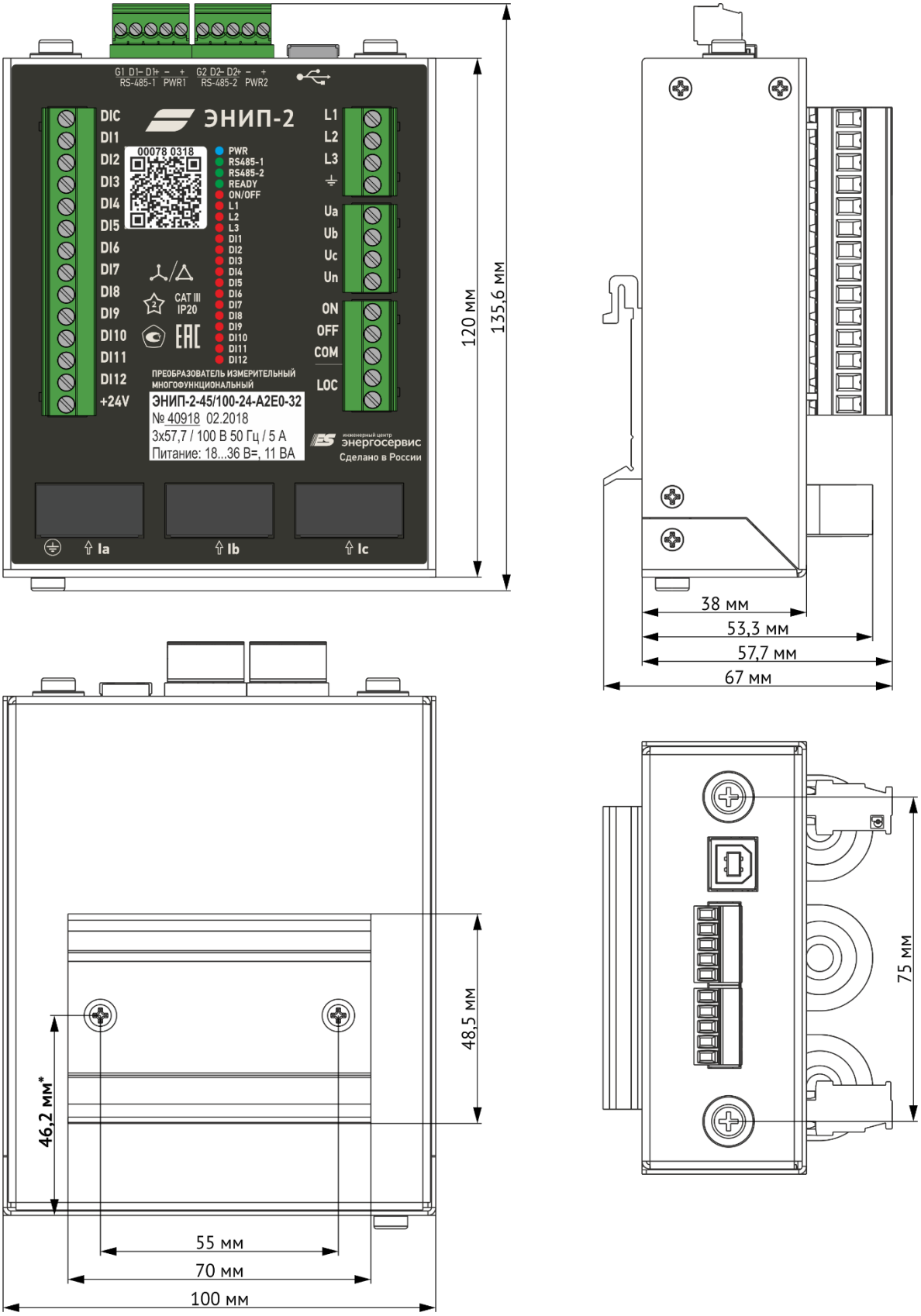

Figure 2.8. Dimension of ENIP-2 Compact, mm (ENIP-2-45/100-24-A2E0-32 front panel)

3 Features

3.1 General information

Analog current and voltage inputs are converted into analog low voltage signals. These signals go to ADC. ADC performs analog-to digital conversion of instantaneous values of measured signals (40 measures per each period of fundamental frequency 50/60 Hz). Measuring data is further passed on to microcontroller (MCU). ENIP-2 structure scheme is illustrated in fig. 3.1.

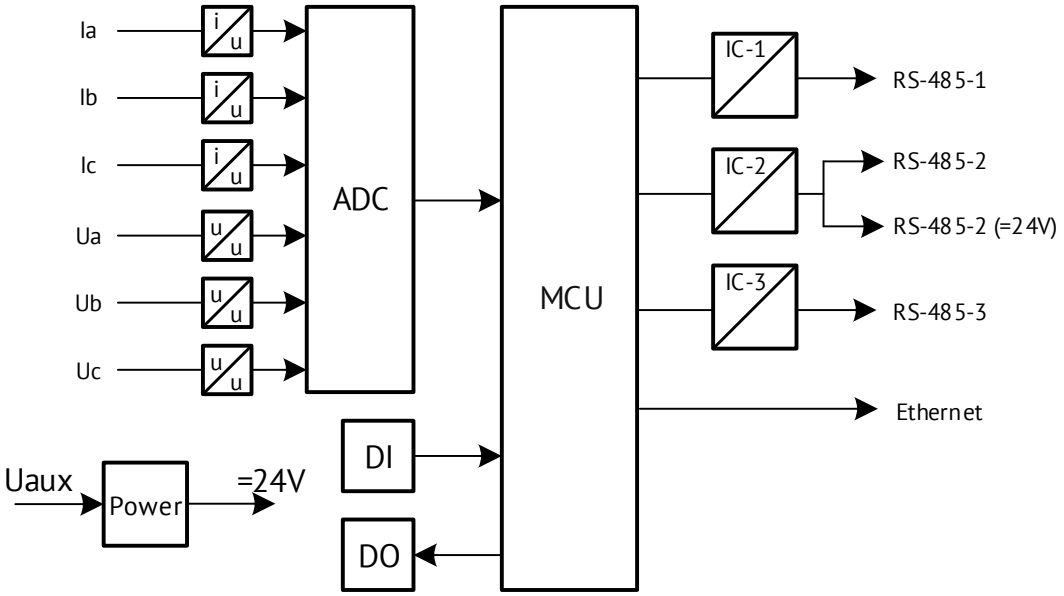

Figure 3.1. ENIP-2 structure scheme

MCU performs:

- Electrical grid parameters calculation (using 50 ms “sliding window” measurement calculation method) – instant measurements;

- Averaging of both measured and calculated parameters through “sliding window” method (possible averaging time is 200, 500, 1000, 1500, 2000 ms) – averaged measurements;

- Processing digital I/O;

- Data exchange with extension systems through the following protocols: Modbus RTU, Modbus TCP, IEC 60870-5-104, IEC 60870-5-101, SNTP, SNMP, IEC 61850-8.1 (IEC 61850-8.1 is optional and is sold separately as an add-on).

Galvanic isolation of RS-485 interface is accomplished through interface converters IC1, IC2, IC3. Built-in functionality of an MCU makes Ethernet port available for use as well. Real-time clock support is also brought about by MCU.

ENIP-2 might be used for different connections (3- or 4-wire electrical grid, with or without transformers). All wiring diagrams see in Appendix A1..

You can choose the current range needed using «ES Configurator».

Current range (% of nominal)	Description
1...200%	It's recommended range. For maximal accuracy ENIP-2 measure in two ranges - 1...70% and 70...200%. Switching between ranges is accompanied by a delay about 200 ms.
2...200%	Fast range. Measurement is provided without switching.

3.2 Measured parameters

3.2.1 ENIP-2 «Standard» and «Compact» provides real-time "Instant" (50 ms) and averaged measurements. Averaging time could be set during the configuration procedure by means of ES Configurator software (available 200, 500, 1000, 1500, 2000 ms periods).

Table 3.1. Available parameters

Parameter	Symbol	3-wire connection*	4-wire connection
RMS			
Effective voltage	U_A, U_B, U_C	-	+
Average effective voltage	U_{L-N}	-	+
Effective line-to-line voltage	U_{AB}, U_{BC}, U_{CA}	+	+
Average effective line-to-line voltage	U_{L-L}	+	+
Effective current	I_A, I_B, I_C	+	+
Average effective current	I	+	+
Active power	P_A, P_B, P_C,	-	+
Total active power	P	+	+
Reactive power	Q_A, Q_B, Q_C	-	+
Total reactive power	Q	+	+
Apparent power	S_A, S_B, S_C	-	+
Total apparent power	S	+	+
Active energy import	WP+	+	+
Active energy export	WP-	+	+
Reactive energy import	WQ+	+	+
Reactive energy export	WQ-	+	+
1st harmonic			
Effective voltage**	U_{A1}, U_{B1}, U_{C1}	-	+
Average effective voltage	U_{L-N1}	-	+
Effective line-to-line voltage	U_{AB1}, U_{BC1}, U_{CA1}	+	+
Average effective line-to-line voltage	U_{L-L1}	+	+
Effective current	I_{A1}, I_{B1}, I_{C1}	+	+
Average effective current	I1	+	+

Parameter	Symbol	3-wire connection*	4-wire connection
Active power	P_{A1}, P_{B1}, P_{C1},	-	+
Total active power	P1	+	+
Reactive power	Q_{A1}, Q_{B1}, Q_{C1}	-	+
Total reactive power	Q1	+	+
Apparent power	S_{A1}, S_{B1}, S_{C1}	-	+
Total apparent power	S1	+	+
Frequency	F	+	+
Phase angle φ phase A	cos/tg/φ_A	+	+
Phase angle φ phase B	cos/tg/φ_B	+	+
Phase angle φ phase C	cos/tg/φ_C	+	+
Phase angle φ total	cos/tg/φ	+	+
Voltage zero sequence	U_0	-	+
Voltage positive sequence	U_1	-	+
Voltage negative sequence	U_2	-	+
Voltage unbalance of the negative sequence $K_{2U}=\frac{U_2}{U_1}$	K_{2U}	-	+
Voltage distortion $K_U=\frac{\sqrt{U^2-U_{1h}^2}}{U_{1h}}$	K_U	-	+
Current zero sequence	I_0	-	+
Current positive sequence	I_1	-	+
Current negative sequence	I_2	-	+
Current unbalance of negative sequence $K_{2I}=\frac{I_2}{I_1}$	K_{2I}	-	+
Current distortion $K_I=\frac{\sqrt{I^2-I_{1h}^2}}{I_{1h}}$	K_I	-	+
Total harmonic distortion THD=$(P-P_1)/P_1$	THD	-	+
Active power zero sequence	P_0	-	+
Reactive power zero sequence	Q_0	-	+

* «+» means that parameter available for the connection (Connection is configured by «ES Configurator»);

ENIP-2 measures and saves active and reactive energy in forward and reverse directions. Maximum energy value is 99999999.9 Wh (varh). In case of overflow, energy counting from zero.

ENIP-2 is not certificated as energy meter, nevertheless, its accuracy class is 0.2S (energy measurement error for $0.01I_{rated}$ is 0.35%, and for I_{rated} – 0.001%).

3.3 Extension modules

Up to 10 external modules can be connected to the ENIP-2. The device can process up to 32 digital and up to 10 analog signals. Available module types are following:

Module type	AI	DI	DO
ENMV-1-6/3R	-	6	3 EMR
ENMV-1-24/0	-	24	-

Module type	AI	DI	DO
ENMV-1-16/3R	-	16	3 EMR
ENMV-1-16/6	-	16	6 SSR
ENMV-1-0/22	-	-	22 SSR
ENMV-1-8X8	8	8	-
ENMV-1-8P2T	10	-	-
ITS	2	-	-

All extension modules should be connected to RS-485-2 interface. Devices are communicated via Modbus-based proprietary protocol.

3.4 Digital signals

The maximum number of digital signals (called «DIO») for ENIP-2 is 32. These include built-in and external DI and DO, configurable setpoints, logical expressions, goose subscribers, diagnostics (table 3.2). Every DIO is configured independently. For details see «ES Configurator manual».

Table 3.2

DIO	Description
Digital output	Built-in or external DO
Digital input	Built-in or external DI
Setpoints	Configurable setpoints for any parameters
Logical expressions	Logical operation AND/OR/NOT/TIMER with any DIO
Goose subscriber	Subscribe to GOOSE-messages IEC61850 8-1
Diagnostic	Errors monitoring

3.4.1 Digital outputs

ENIP-2 Standard and Compact provides switchgear equipment control using built-in digital outputs or using extension ENMV-1 modules, which are connected to ENIP-2 RS-485-2 interface.

Table 3.3

	ENIP-2 Standard	ENIP-2 Compact	Extension module ENMV
Type	3 SSR output	3 (electromagnetic + high power solid-state) relay output	electromagnetic relay or SSR output
Maximum voltage	300 V DC 250 V AC	250 V DC/AC	250 V AC
Maximum current	100 mA DC/AC	impulse 200 ms – 9 A short impulse – 6 A long impulse – 5 A longtime – 1.3 A	100 mA DC/AC (SSR) 7 A AC (EMR)

For built-in DO use intermediate relay if current is more than 100 mA:

- AC: Finder 55.33.8.230.0010, Relpol (R4-2014-23-5230-WT) or similar;
- DC: Finder 55.33.9.220.0010, Relpol (R4-2014-23-1220-WT) or similar.

For control ENIP-2 supports Single command (<45>) and Double command (<46>) over IEC 60870-5-101/104 and Force Single Coil (the function code 5) over Modbus.

3.4.2 Digital inputs

ENIP-2 is equipped with 0, 4, 8 or 12 built-in digital inputs with debounce filter. Contacts for digital inputs can be wet or dry. Dry contacts are powered by built-in 24 V DC supply.

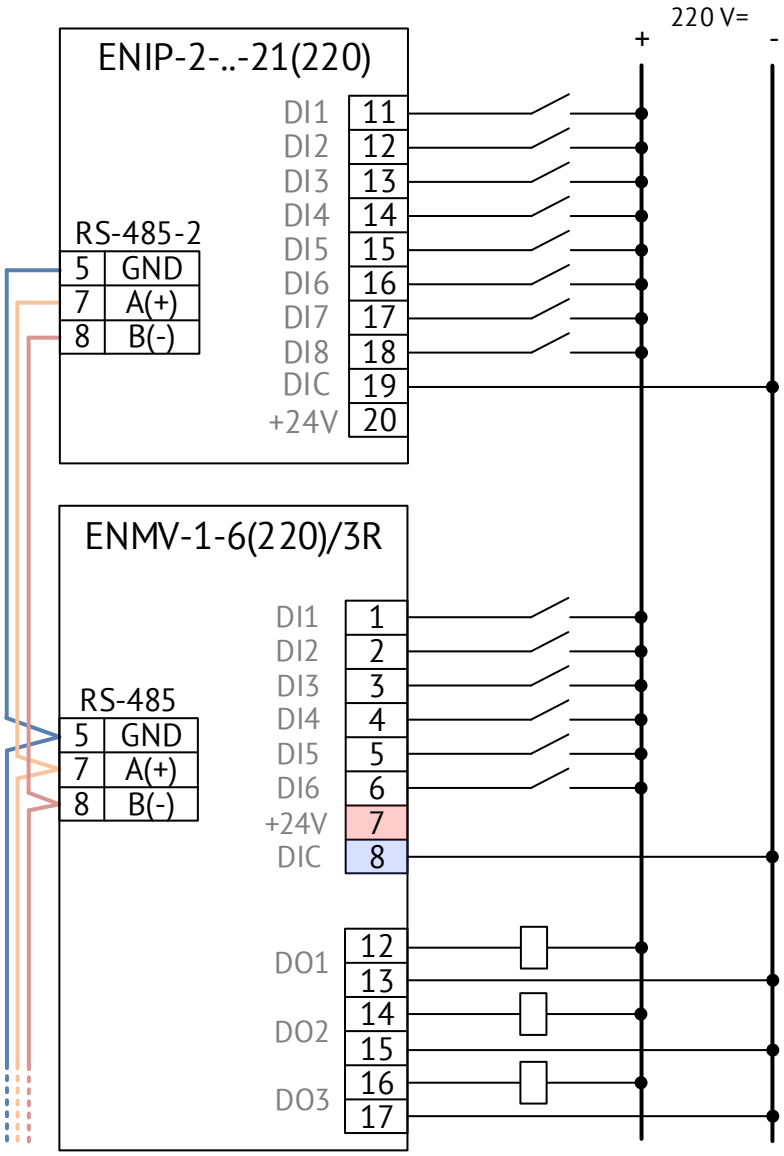

Figure 3.2. ENIP-2-...-21(220) with ENMV-1-6/3R connection diagram. Built-in +24V power supply (terminal 20) is disabled

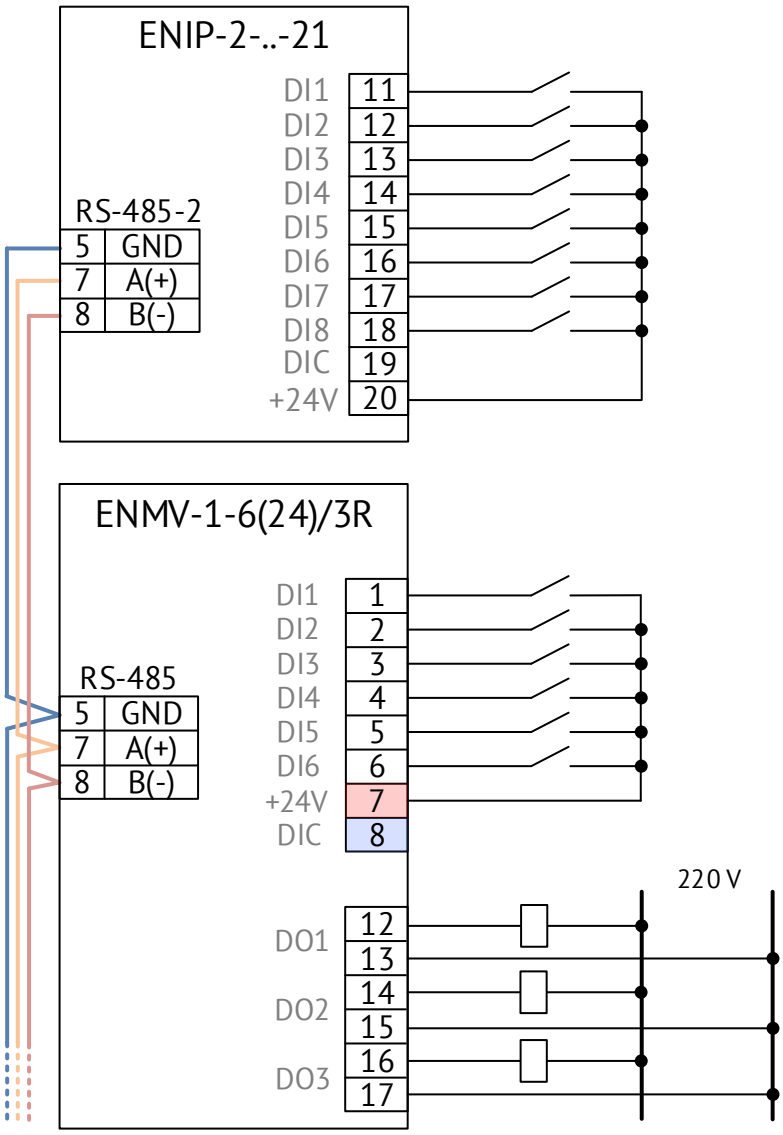

Figure 3.3. ENIP-2-...-11 with ENMV-1-6/3R connection diagram (dry contact)

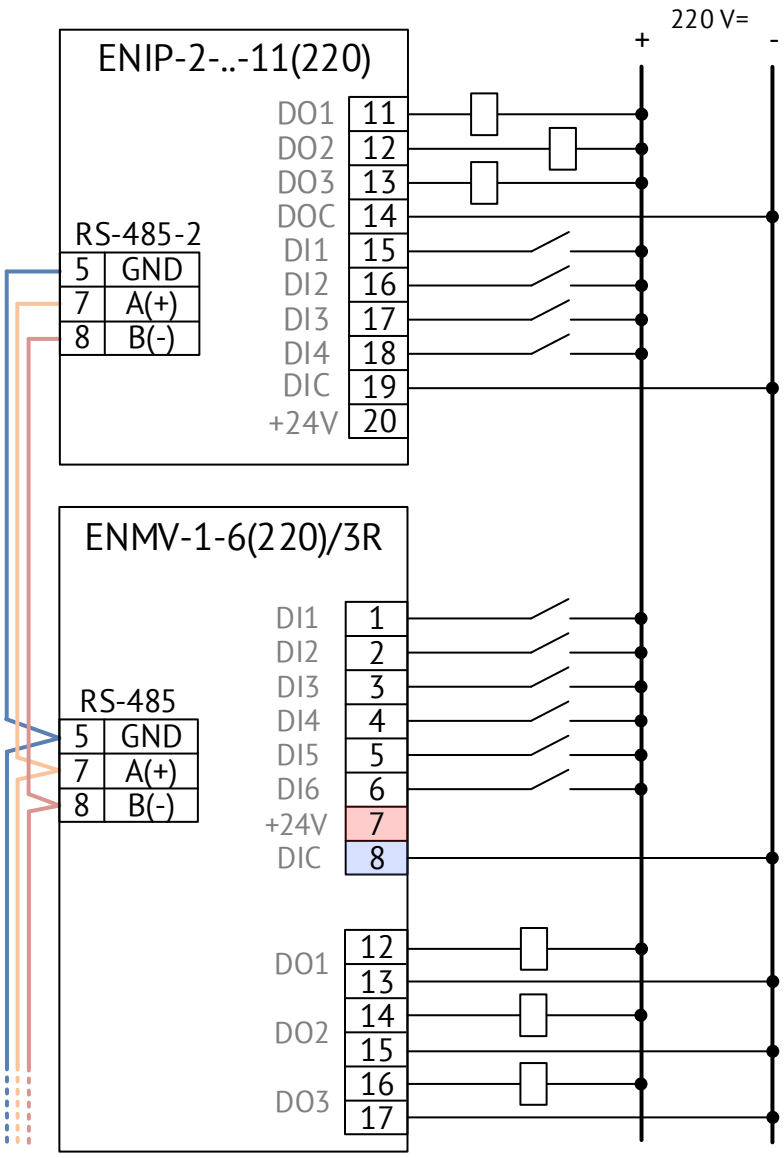

Figure 3.4. ENIP-2-...-11(220) with ENMV-1-6/3R connection diagram. Built-in +24V power supply (terminal 20) is disabled

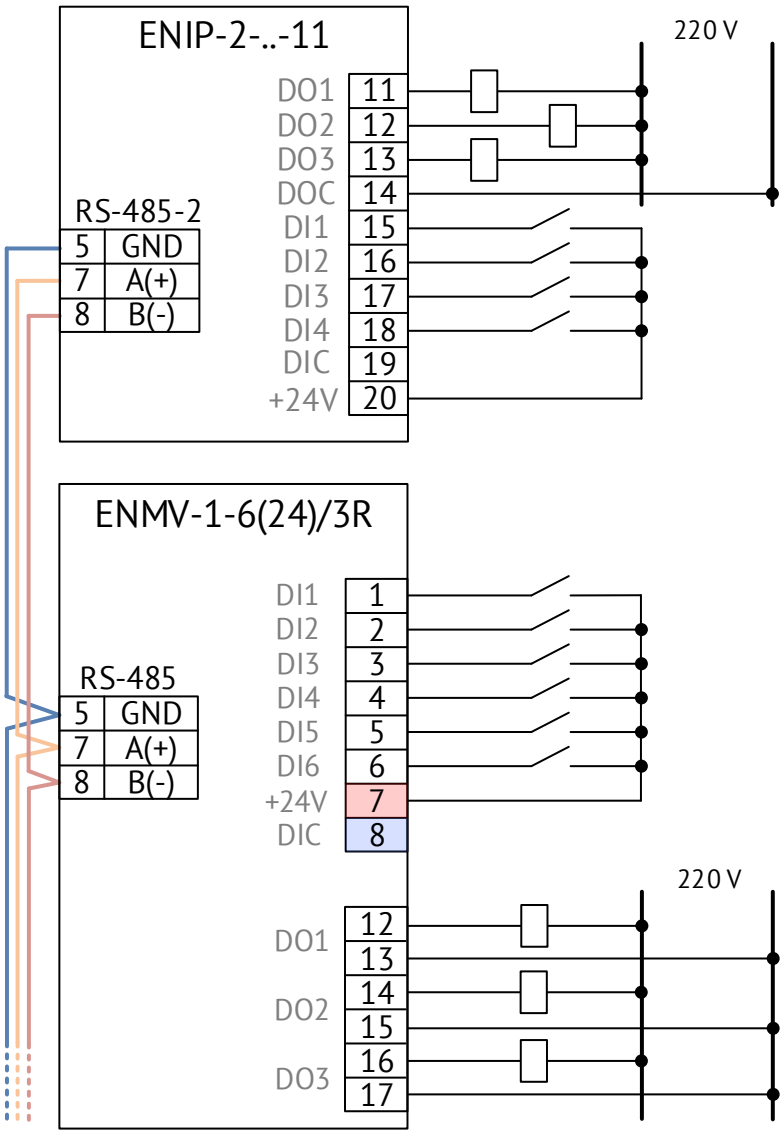

Рисунок 3.1. ENIP-2-...-11 with ENMV-1-6/3R connection diagram

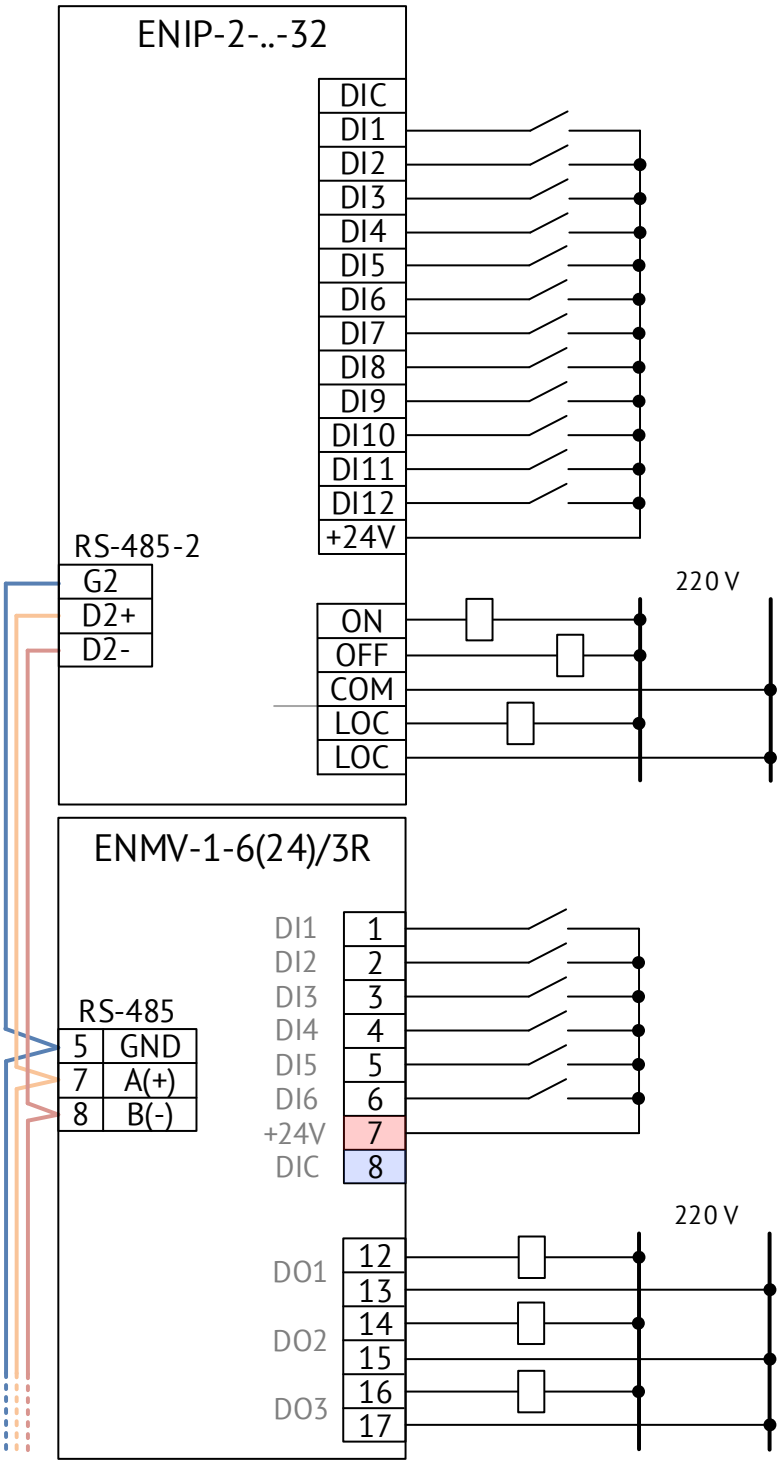

Рисунок 3.2. ENIP-2-...-32 with ENMV-1-6/3R connection diagram

ENIP-2 can contain up to 32 digital signals. These include built-in DI as well as DI from extension ENMV modules connected to ENIP-2 via RS-485-2 (up to 10 modules).

ENIP-2 has events log of DI statuses. Each record of event log is marked with time stamp with 1 ms resolution.

DI statuses are transferred over IEC 60870-5-101, IEC 60870-5-104 in Single point or Double point.

Table 3.4

	ENIP-2-XX/X-X-XX-X1	ENIP-2-XX/X-X-XX-X1(220)	ENIP-2-XX/X-X-XX-32
Type	0, 4 or 8 wet contact	0, 4 or 8 wet contact	12 wet contact
Voltage	20...250 V DC	200...250 V AC	18...36 V DC
Current	2 mA	2 mA	2 mA

3.5 Analog outputs

ENIP-2-XX/X-X-XX-**4**1 has 4 configurable analog outputs AO1, AO2, AO3, AO4.

Available ranges of output signals:

Analog output range, mA	Rated current, mA	Accuracy, %
0...5	5	0,2
0...20	20	0,2
0...24	24	0,2
4...20	16	0,2
-5...5	5	0,2
-20...20	20	0,2
-24...24	24	0,2

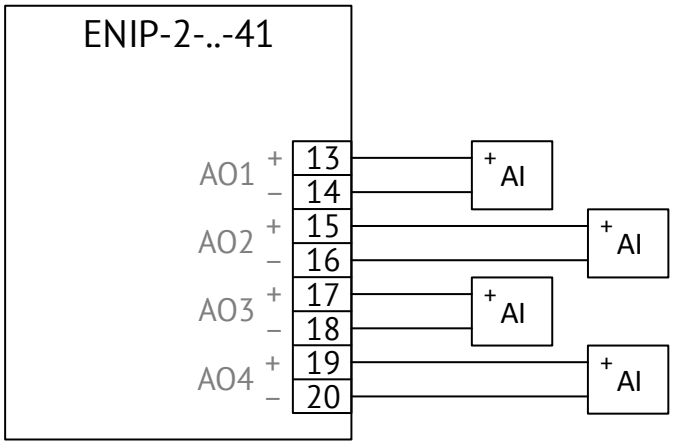

3.6 Interfaces and protocols

All interfaces are galvanically isolated. Each port's configuration is supposed to be defined independently (for example, RS-485-1 – IEC 60870-5-101, RS-485-2 – Modbus RTU, RS-485-3 –IEC 60870-5-101).

Modbus description see in appendix B. IEC 60870-5-101, IEC 60870-5-104 description see in Appendix C.

User can change default parameters' addresses using «ES Configurator» software (for more information go to chapter 6 of the manual).

Available interfaces are listed below:

	ENIP-2-XX/X-X-**A1E0**-01	ENIP-2-XX/X-X-**A2E0**-21(32)	ENIP-2-XX/X-X-**A3E4**-21	ENIP-2-XX/X-X-**A2E4x2**(FX)-21
				
USB	■	■	■	■
RS-485-1	■	■	■	■
RS-485-2		■	■	■
RS-485-3			■	
Ethernet 100Base-TX			■	
2xEthernet 100Base-TX (100Base-FX)				■

3.6.1 RS-485

«RS-485-1», «RS-485-2», «RS-485-3»

Type	2-wire (D+, D-, GND)
Baud rate	1200, 2400, 4800, 9600, 19200, 38400, 57600, 115200 bps
Parity	none, odd, even
Stop bits	1, 2
Response delay	0...25.5 ms
Protocols	Modbus RTU IEC-60870-5-101

All interfaces can be used for data transfer. Only rs-485-2 is designed to connect external modules ENMV and ITS.

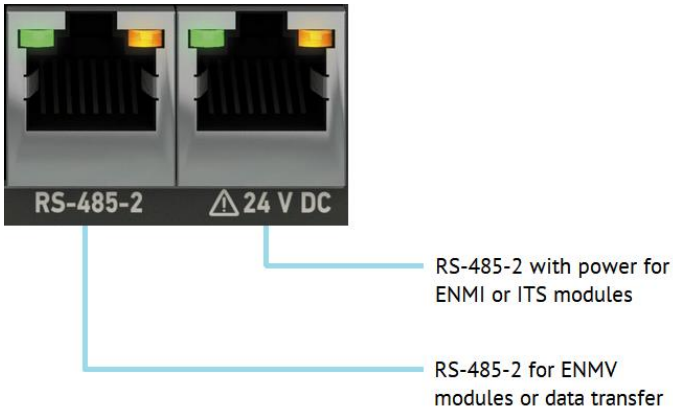

«RS-485-2» intarface consists of two RJ45. First one has only digital pins, second one has both digital pins and power pins 24 V DC. RS-485-2 can serve as a source of power supply for ENMI (if the cable length does not exceed 20 meters). You can connect ENMV and ENMI together to one port (master mode must be activated on ENIP-2).

3.6.2 Ethernet

Type	8P8C twisted pair 100BASE-TX or LC 100BASE-FX
Transmission rate	100 Mbps
Connection	4 configurable independent sockets
Protocols	Modbus TCP IEC-60870-5-104 Modbus RTU (over TCP) IEC 60870-5-101 (over UDP) RS-TCP (pass-through mode) IEC 61850-8.1 (as an add-on separately sold option) SNTP (sync time) SNMP.

"Ethernet" interface is also used to configure ENIP-2 through the Web (for more details see in 6.3).

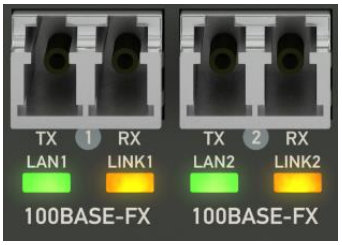

ENIP-2-...-A2E4x2FX-X1 has two Ethernet 100BASE-FX (connector's type is LC for using with 62,5/125 mm and 50/125 mm multi-mode fiber). Wave length for LED is 1300 nm. Maximum cable length is 2000 meters.

Laser's class is 1 according to the EN60825-1 standard.

Ethernet ports in «maximum» modification operate as switch. ENIP-2 has only one IP address. Available network types as follows:

ENIP-2 without RSTP, PRP

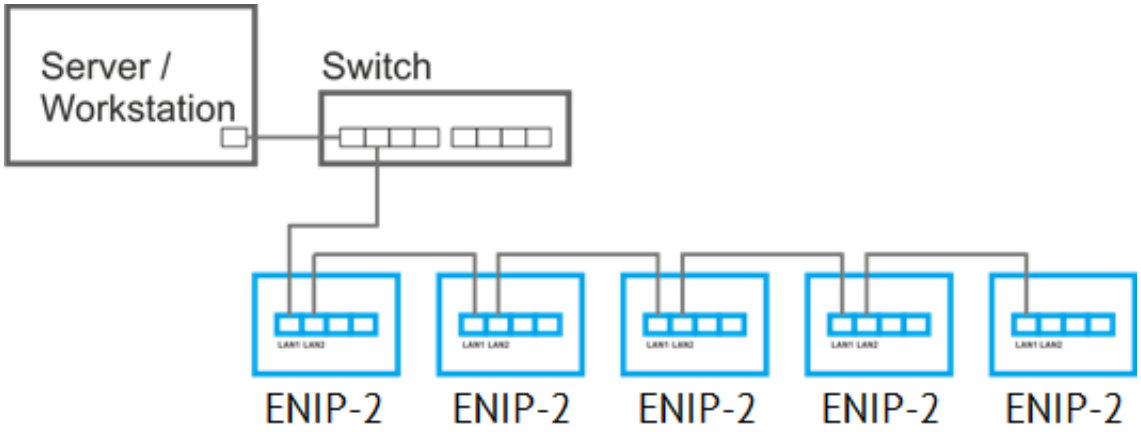

ENIP-2 with RSTP

Up to 39 ENIP-2 devices could be connected in the ring.

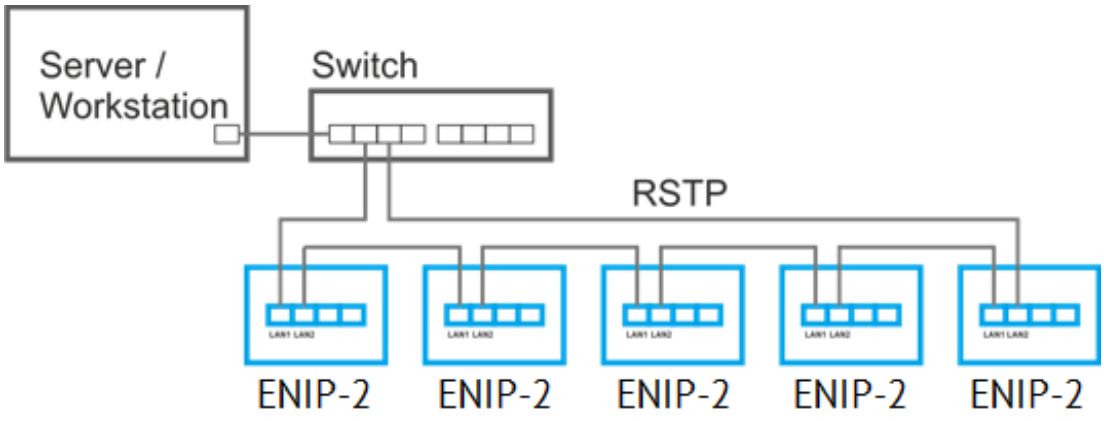

ENIP-2 with PRP

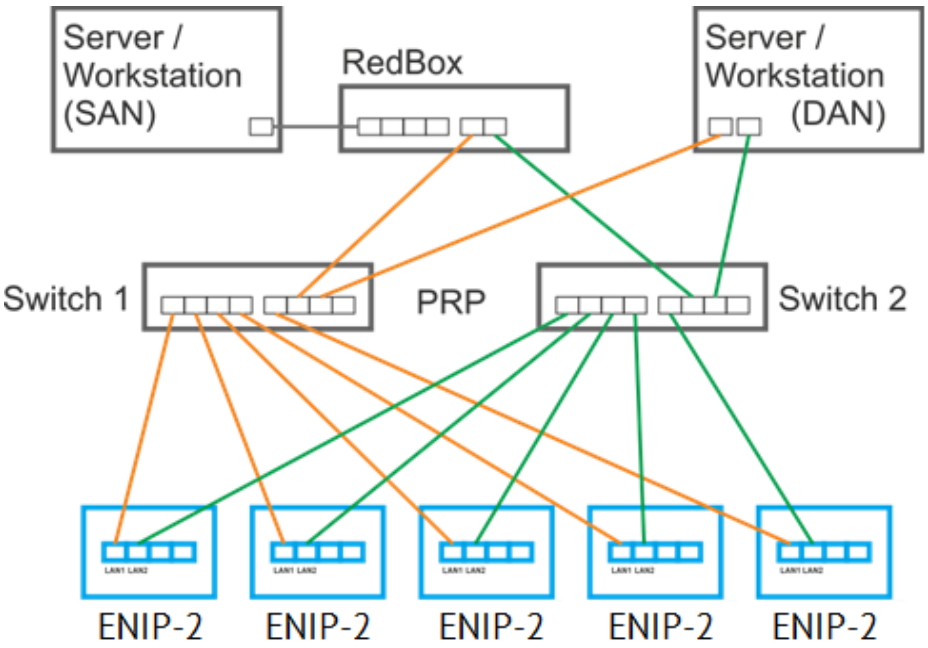

3.6.3 USB

Service interface for:

- configuring,
- reading data and logs,
- firmware updating,
- «USB-COM mode» (ENIP-2 can be switched to virtual COM-port mode)

3.6.4 Default settings

RS-485-1: IEC 60870-5-101, baud rate 19200 bps, address ASDU 1

RS-485-2: Modbus RTU, baud rate 19200 bps, slave address 1, master mode is activated

RS-485-3: Modbus RTU, baud rate 19200 bps, slave address 1

Ethernet: IP address 192.168.0.10

Data map for each protocol see in corresponding appendix.

3.7 Extension display panel

Extension ENMI display modules make it possible to visualize values of main measured and calculated parameters.

ENMI is produced in different models: LEDs, TFT color touch screen, monochrome LED. ENMI displays measured and calculated parameters from ENIP-2.

ENMI-3

LED display panel for ENIP-2

ENMI-4m, ENMI-4e

4.3” TFT LCD touch screen display for ENIP-2

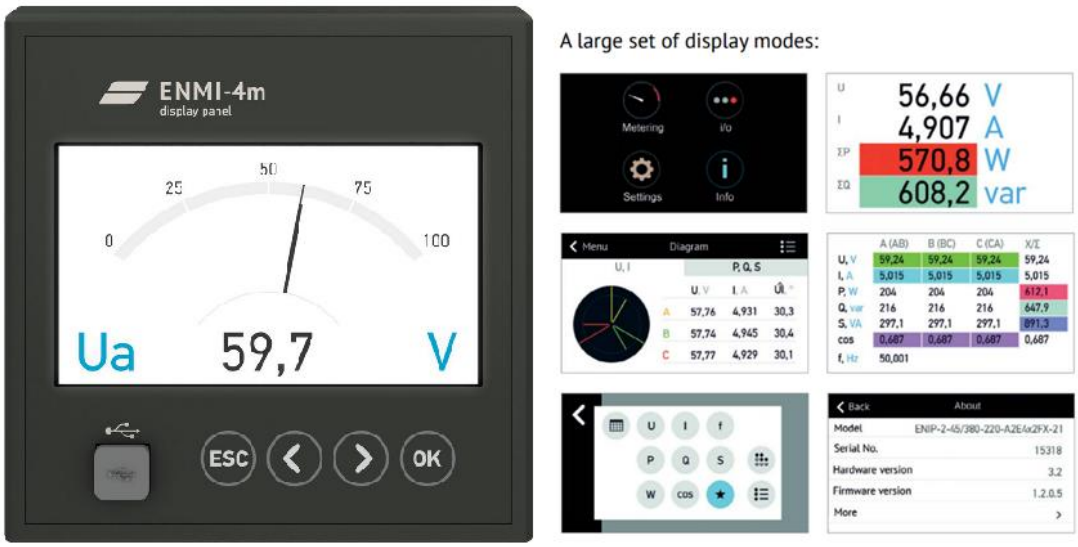

ENMI-7

Compact 2.42” OLED display for ENIP-2

RS-485-2 with power (24 V DC) interface may be used as a combined power supply and data source for ENMI.

Figure 3.5. Separate installation of ENIP-2 and ENMI.

Display modules can be paired with ENIP-2 by panel or cabinet mounting.

Figure 3.6. Combined installation of ENIP-2 and ENMI

For full information about display panels ENMI see «ENMI manual».

The following conditions must be met to connect several ENMI to RS-485-2 together with ENMV-1:

- Modbus RTU is set on ENMI, slave mode;
- Master mode is activated on ENIP-2;
- Addresses of Modbus registers on ENIP-2 match ENMI's addresses.

3.8 Real-time clock

ENIP-2 has real-time clock. It allows to save event logging and to transmit data with timestamp over IEC 60870-5-101/104, Modbus or IEC 61850-8-1.

The following table gives all available sources for sync time.

Ethernet	IEC 60870-5-104, SNTP
RS-458	IEC 60870-5-101

Timestamp over IEC 60870-5-101/104 may transmit with UTC or local time (with summer/winter time).

All settings, including time source, validity checking and time zone are configured by «ES Configurator».

Time accuracy with synchronization is up to 500 µs. Without synchronization ENIP-2 has up to 3 seconds error per day.

3.9 Event logging

ENIP-2 saves in non-volatile memory the following log messages:

- Event log (software update, configuration change, power supply on/off, diagnostic messages); up to 40 last events with timestamp are available.
- Digital signals log (status of internal and external digital inputs and outputs, thresholds); 200 last events with timestamp are available.

You may read, erase or export to MS Excel log files using «ENIP Test» software.

4 Specification

4.1 Measuring input

Nominal current, voltage and power see in table 4.1.

Table 4.1

ENIP-2 modifications	Nominal:				
	Voltage line-to-neutral U_{L-N}, V	voltage line-to-line U_{L-L}, V	current I, A	power, P, W; Q, var; S, VA	total power, P, W; Q, var; S, VA
ENIP-2-41/100...	57.7, 63.5	100, 110	1	57.7, 63.5	173.1, 190.5
ENIP-2-45/100...	57.7, 63.5	100, 110	5	288.5, 317.5	865.5, 952.5
ENIP-2-41/400...	230	400	1	230	690
ENIP-2-45/400...	230	400	5	1100	3300
ENIP-2-11/0-...-32	-	-	1	-	-
ENIP-2-15/0-...-32	-	-	5	-	-

Nominal frequency: 50 or 60 Hz.

Nominal power factor: 1.

The maximum burden for current inputs is 0.1 VA, for voltage inputs is 0.1 VA. The internal resistance of voltage inputs exceeds 4 MΩ.

ENIP-2 is able to continue measuring with the stated precision after influence of current/voltage overloads specified in table 4.2.

Table 4.2

Current	Voltage	The number of overload	Overload time, s	Time between overloads, s
7I	U	2	15	60
10I	U	1	15	-
40I	U	1	1	-
I	2U	1	60	-

I – nominal current, U – nominal voltage

4.2 Operating conditions

Table 4.3

№	Condition	Value
1	Temperature, °C	-40...+70
2	Relativity humanity, %	Up to 95, non-condensing
3	Operation mode	continuous
4	Turn-on time	<30 sec
5	MTBF	100000 h
6	Device life	20 year
7	Seismic sustainability	Up to 6 degree MSK-64

№	Condition	Value
8	Max altitude	3500 m
9	Input frequency, Hz	50/60±5
10	Input current load, % of nominal	1÷200 (2÷200)*
11	Input voltage load, % of nominal	5÷150
12	Power factor	±(0...1...0)
13	sin φ	±(0...1...0)
14	Voltage unbalance, %	Up to 100
15	Current unbalance, %	Up to 100
* Note: ranges descriptions see in page 15.		

Normal conditions see in table 4.4.

Table 4.4

Condition	Normal range
Temperature, °C	15÷25
Relativity humanity, %	Up to 95
Atmospheric pressure, kPa (mmHg)	65÷106.7 (487.5÷800)
Position	any
Supply frequency, Hz	45÷65

4.3 Accuracy

Precision of measuring in normal conditions corresponds to the table 4.5.

Table 4.5

№	Parameter's range from nominal	Accuracy		
		γ_X, %	δ_X, %	ΔX
1.	Effective voltage			
	0.2U ≤ U ≤ 1.5U*	±0.2	±0.2	
	0.05U ≤ U < 0.2U		±0.75	
2.	Effective current			
	0.2I ≤ I ≤ 2I	±0.2	±0.2	
	0.05I ≤ I < 0.2I		±0.75	
	0.01I ≤ I < 0.05I		±2.0	
3.	Active power			
	0.2I ≤ I ≤ 2I, 0.2U ≤ U ≤ 1.5U*, 0.8≤|*cosφ*|≤1	±0.5	±0.5	
4.	Total active power	±0.5		
5.	Reactive power			
	0.2I ≤ I ≤ 2I, 0.2U ≤ U ≤ 1.5U*, 0.8≤|*sinφ*|≤1	±0.5	±0.5	
6.	Total reactive power	±0.5		
7.	Apparent power	±0.5		
	0.2I ≤ I ≤ 2I, 0.2U ≤ U ≤ 1.5U		±0.5	
8.	Total apparent power	±0.5		
9.	Frequency			±10 mHz**
10.	Power factor cos φ			±0.01
* For the ENIP-2-.../690-... modification: 0.05U ≤ U ≤ 1.15U;				

** For the ENIP-2-.../690-... modification: ±1 mHz;

When conditions differ from normal, ENIP-2 gives additional measurement error according to table 4.6.

Table 4.6

Condition	Value	Added error	
		δ_{X1}/γ_{X1}, %	ΔX_1
Temperature, °C	-40...+70*		
Current, voltage, depending on the modification			
ENIP-2-...-X1		±0.025/5 °C	-
ENIP-2-...-32		±0.05/5 °C	-
Power, depending on the modification			
ENIP-2-...-X1		±0.05/5 °C	-
ENIP-2-...-32		±0.1/5 °C	-
Frequency		-	±0.005/10°C
Strength of the magnetic field, mT	0.5		
Current, voltage		±0.1%	
Power		±0,25%	
Frequency		-	±0.005 Hz
Power factor cos φ (sin φ)	±(0.5 – 0.8)		
Power		±0.4%	

4.4 Power supply

Table 4.7

ENIP-2 modifications	Voltage	Consumption
ENIP-2-...-X1 (Standard)	120...370 V DC or 100...265 V AC, 45...55 Hz;	(3 to 11) VA up to 19 VA (with ENMI)
	40...160 V DC	(3 to 11) W up to 19 W (with ENMI)
	18...36 V DC	(3 to 11) W up to 19 W (with ENMI)
ENIP-2-...-32 (Compact)	18...36 V DC	11 W

4.5 Isolation

Table 4.8

Isolation to ground	1 min voltage, VAC
Digital interfaces	500
Input voltage	2000
Input current	2000
Input power 24 VDC **Input power 110 VDC** **Input power 220 V AC/DC**	500 1500 2000
DI 24 VDC **DI 220 VDC**	500 2000
DO, AO	500

5 Operation

ENIP-2 might be installed in protection compartments of enclosed switchgear, in panels and cabinets. Due to wide operating temperature range, ENIP-2 can be applied in unattended and non-heated facilities.

Use wiring diagrams in the Appendix A3 to connect ENIP-2 to power supply properly.

Make sure that selective main circuit breaker for power supply circuit is set near the ENIP-2.

Attention! Before connect/disconnect ENIP-2 to power supply grid make sure that all sources of power supply are disconnected.

5.1 Package contents

Intelligent electronic device ENIP-2	-	1
ENIP.411187.001 PC	-	1
CD (Manual ENIP.411187.002, «ES configurator»)	-	1

All documentation and software updates see on http://www.enip2.com/support

5.2 Before installation

After receiving ENIP-2 from manufacturer, make sure that packing has no defects.

Unpacking ENIP-2, check the package contents.

Compare characteristics given in passport with the label on frontal side of the device.

When operating ENIP-2, follow the rules set in the manual.

Before connecting/disconnecting ENIP-2 to digital interfaces or measuring inputs make sure that all sources of power supply are disconnected.

ENIP-2 is supposed to be connected straight to instrument transformers or power lines.

When connecting ENIP-2 to RTU (or SCADA) follow the manual of RTU (SCADA).

Do not use ENIP-2 in an explosive or corrosive environment.

Save ENIP-2 from heating above 70 °C, large temperature variations and strong electro-magnetic fields.

5.3 Mounting

For safety, you must read the instructions in this manual before performing mounting and operation. Only qualified personnel should be allowed for installation.

ENIP-2 is mounted on panel, cabinet (combined with ENMI) or 35mm DIN-rail.

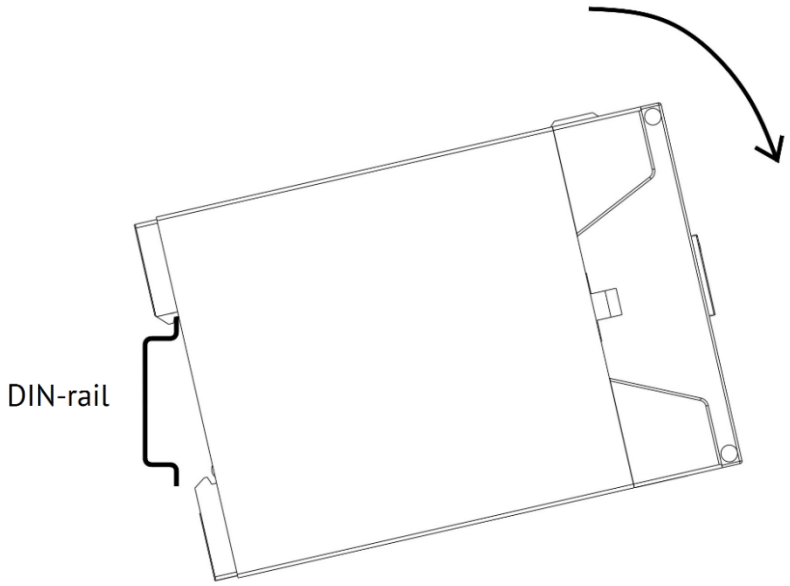

Figure 5.1. ENIP-2 Standard installation to 35 mm DIN-rail.

Pull down the clip in bottom to remove ENIP-2 from DIN-rail.

Mounting bracket for installation in enclosed switchgears RM-6 (Schneider Electric) are available for ENIP-2 Compact.

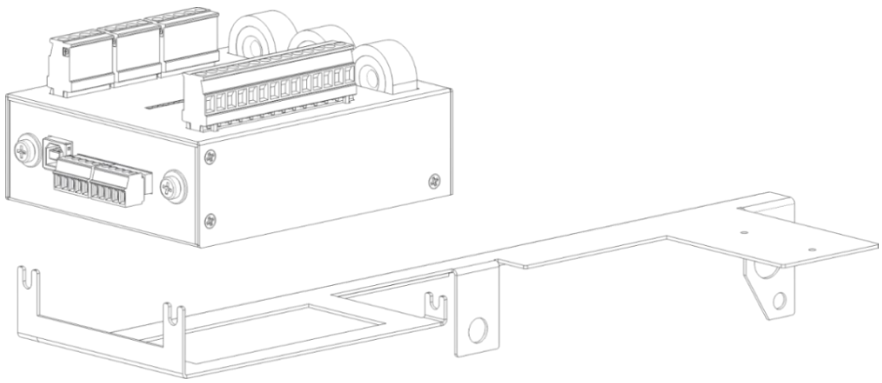

Figure 5.2. ENIP-2 Compact installation with RM6-KP bracket

Dimensions of RM6-KP bracket see in fig. 5.3.

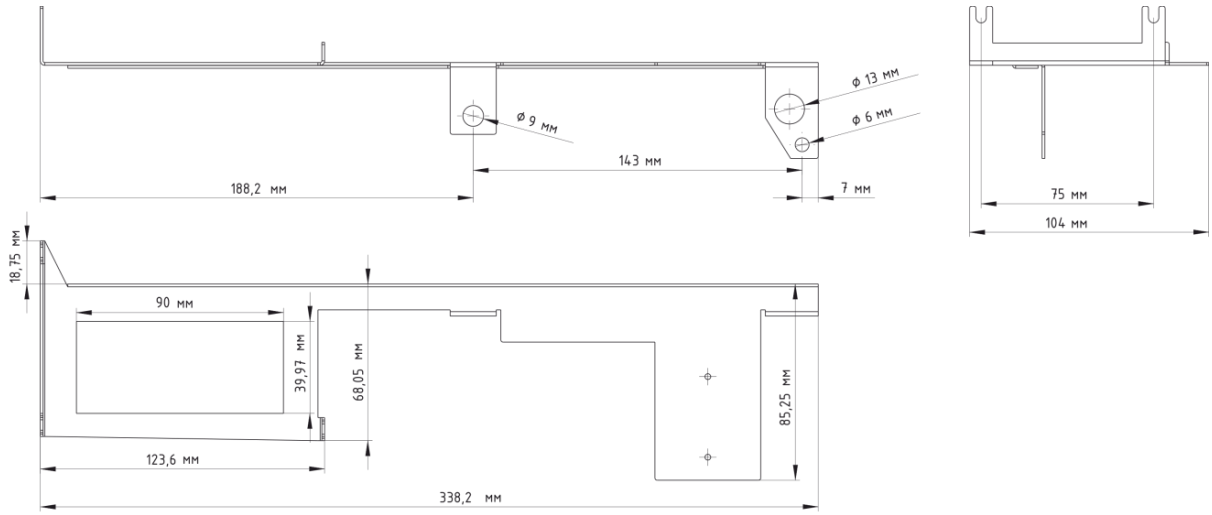

Figure 5.3. RM6-KP dimensions (in millimeters)

5.4 Connection

5.4.1 ENIP-2 has screw-type terminals for wiring connection.

Table 5.1

Terminals	ENIP-2-...-X1	ENIP-2-...-32 (Compact)
Power supply	2.5 mm² wires (AWG 14)	1.5 mm² wires (AWG 16)
Current input **Voltage input**	4 mm² wires (AWG 12)	4 mm² wires (AWG 12) 2.5 mm² wires (AWG 14)
Inputs/Outputs	2.5 mm² wires (AWG 14)	2.5 mm² wires (AWG 14)
Sensor	2.5 mm² wires (AWG 14)	2.5 mm² wires (AWG 14)
Display	shielded patch cord Cat5 cables using 8P8C (RJ45)	0.25 mm² wires (AWG 24)
Digital interface	0.25 mm² wires (AWG 24) or shielded patch cord Cat5 cables using 8P8C (RJ45)	0.25 mm² wires (AWG 24)

Connections diagrams see in appendix A.

Tightening torque is 0.5 to 0.6 N·m.

5.4.2 Function of terminals and connectors

Points of connection for measuring circuits, discrete signals circuits and power supply are listed in the tables below.

Table 5.2

terminal	ENIP-2-XX/X-X-XX-X1	
	symbol	description
1	Il1	I1 input
2		I1 output
3	Il2	I2 input
4		I2 output
5	Il3	I3 input
6		I3 output
7	L1	U1 input
8	L2	U2 input
9	L3	U3 input
10	N	UN input

Table 5.3

terminal	ENIP-2-XX/X-X-XX-41		ENIP-2-XX/X-X-XX-21		ENIP-2-XX/X-X-XX-11	
	symbol	description	symbol	description	symbol	description
11	-		DI1	Digital input 1	DO1	Digital output 1
12	-		DI2	Digital input 2	DO2	Digital output 2
13	AO1	Analog input 1	DI3	Digital input 3	DO3	Digital output 3
14		Analog output 1	DI4	Digital input 4	DO4	Digital output 4
15	AO2	Analog input 2	DI5	Digital input 5	DI1	Digital input 1
16		Analog output 2	DI6	Digital input 6	DI2	Digital input 2
17	AO3	Analog input 3	DI7	Digital input 7	DI3	Digital input 3
18		Analog output 3	DI8	Digital input 8	DI4	Digital input 4
19	AO4	Analog input 4	DIC	Digital input com	DIC	Digital input com
20		Analog output 4	+24	Digital input power	+24	Digital input power
21	GND	RS-485-1 ground	GND	RS-485-1 ground	GND	RS-485-1 ground
22	D+	RS-485-1 data +	D+	RS-485-1 data +	D+	RS-485-1 data +
23	D-	RS-485-1 data -	D-	RS-485-1 data -	D-	RS-485-1 data -
24	-	Power supply PE conductor	-	Power supply PE conductor	-	Power supply PE conductor
25	N/-	Power supply N/-	N/-	Power supply N/-	N/-	Power supply N/-
26	L/+	Power supply L/+	L/+	Power supply L/+	L/+	Power supply L/+

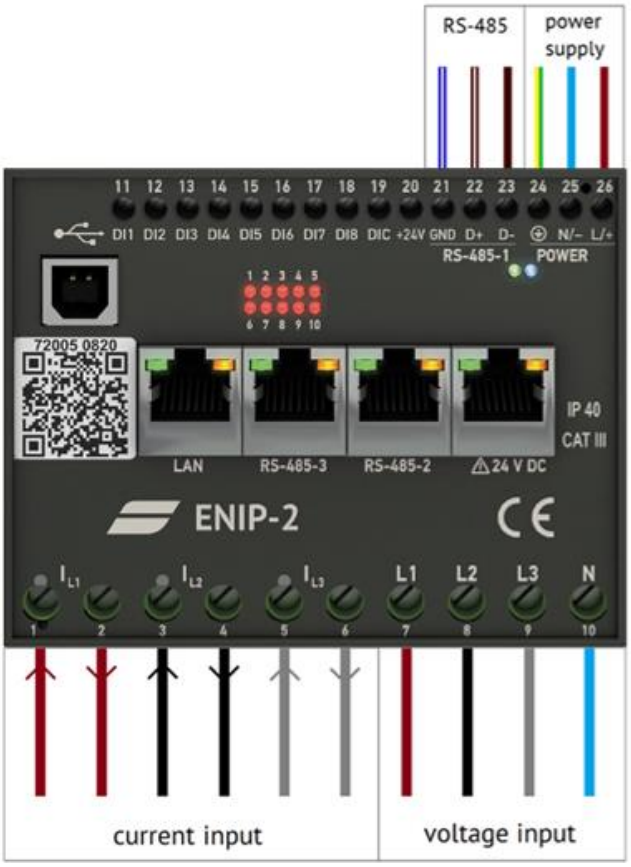

Figure 5.4 ENIP-2 analog inputs

5.4.3 RJ45 pinouts

Digital interfaces pinouts for ENIP-2 given in Table 5.4.

Table 5.4

Interface	RJ45 pinout
RS-485-1, RS-485-3	5 – GND 7 – A (data+) 8 – B (data-)
RS-485-2 with power	1,2 –power supply for ENMI (+24 V DC) 3,4 –power supply for ENMI (0 V) 5 – GND 7 – A (data+) 8 – B (data-)
Ethernet	1 – TX+ (Transmit Data+) 2 – TX- (Transmit Data-) 3 – RX+ (Receive Data+) 6 – RX- (Receive Data-)

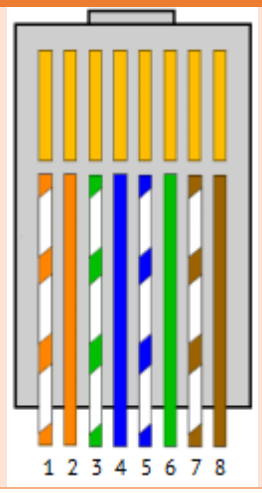

6 Settings

ENIP-2 configuration setting implies setting up parameters for communication ports (RS-485 and Ethernet), transmitted data, connection types, sync time, DIO and etc.

6.1 Firmware update

We are continuously working on adding on new features and updates for ENIP-2. That is why before using ENIP-2, please, visit our website to check the latest firmware and software (but it is not critical). To program new firmware on ENIP-2 use special update utility “EsBootloader”. You can download it from our website too.

Download latest firmware and software: http://www.enip2.com/support/

For firmware updates of ENIP-2, setup connection to ENIP-2 communication port (RS-485, USB or Ethernet). Launch update utility “EsBootloader”.

Select connection type: «COM-port», «USB», or «Ethernet». For «COM-port» set the number of serial port in your system, which is connected to ENIP-2. Set baud rate of serial port (19200 is default).

Select the type of your device: “ENIP-2” or “ENIP-2 E4x2”. In the field “firmware” open file with the last version of ENIP-2 firmware, see Figure 6.1.

To start program firmware, press the button “Auto”. Automatic writing process will start, including: connection to device, erasing old firmware, writing firmware, verifying written firmware and resetting the device. If “Auto” button does not work, turn off power supply of ENIP-2 and turn it on in few seconds.

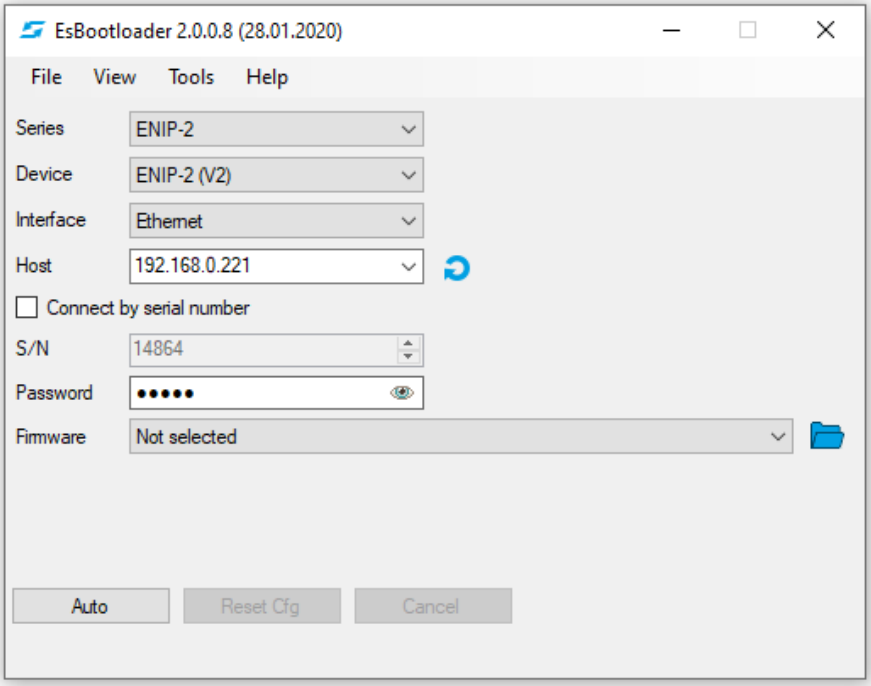

Figure 6.1. “EsBootloader” software main window

6.2 «ES Configurator» software

6.2.1 Installation

Software «ES Configurator” is used to configure IED ENIP-2. The latest version of configuration software can be downloaded here: http://enip2.ru/software/esconfigurator.zip

System requirements: Windows XP or newer and .NET Framework 4.

Download .NET Framework 4 distributive from the official site here: www.microsoft.com/downloads

To install the program, just copy and unzip downloaded archive file in some folder on your PC.

To launch the program, just run the executable file *ESConfigurator.exe*. Then you will see the main window of the program (fig. 6.2):

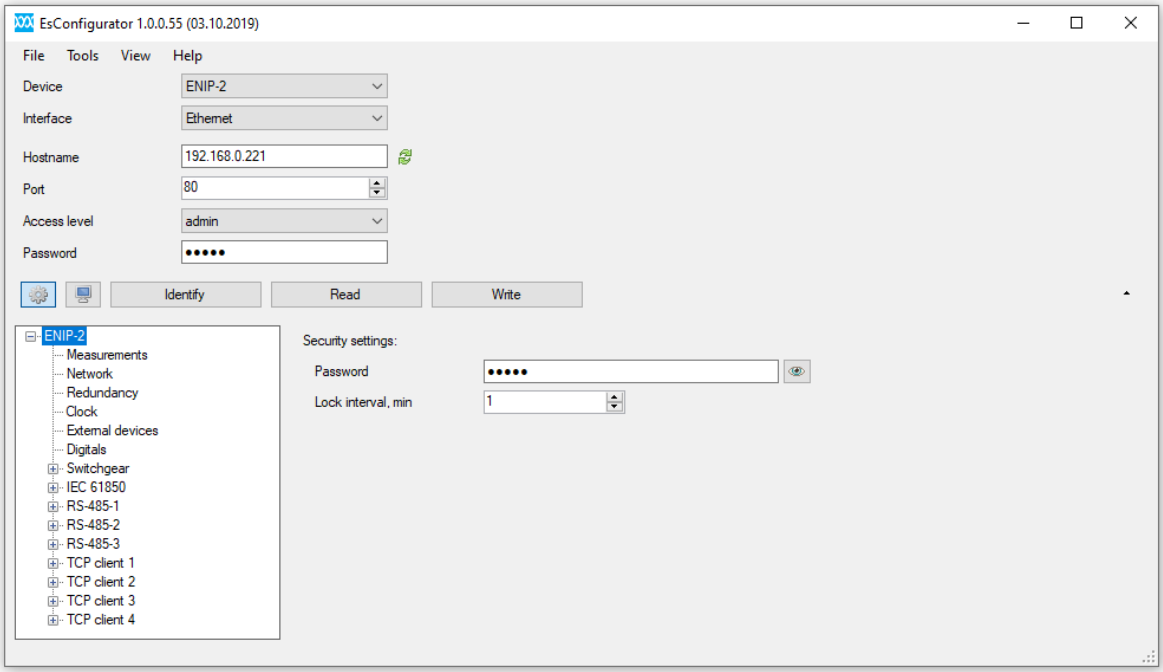

Figure 6.2. “ES Configurator” software main window

Configurator allows to create and save the settings without a necessity of connecting to the device. Detailed information see at: «ES Configurator» software manual

6.2.2 Connection to the device

Connect ENIP-2 to USB port, using USB type A to type B cable (fig. 6.3).

Figure 6.3. USB type A to type B cable.

6.3 ENIP-2 web-interface

For web-configuration of ENIP-2 you should connect the device to your local network and enter a browser following:

http://XXX.XXX.XXX.XXX (XXX.XXX.XXX.XXX – IP-address of ENIP-2) or http://enip2nXXXXX (XXXXX – serial number of ENIP-2).

Default login: *admin*

Default password: *admin*

Use «ESFindIP» for searching ENIP-2 in local network (download from enip2.com/support/software).

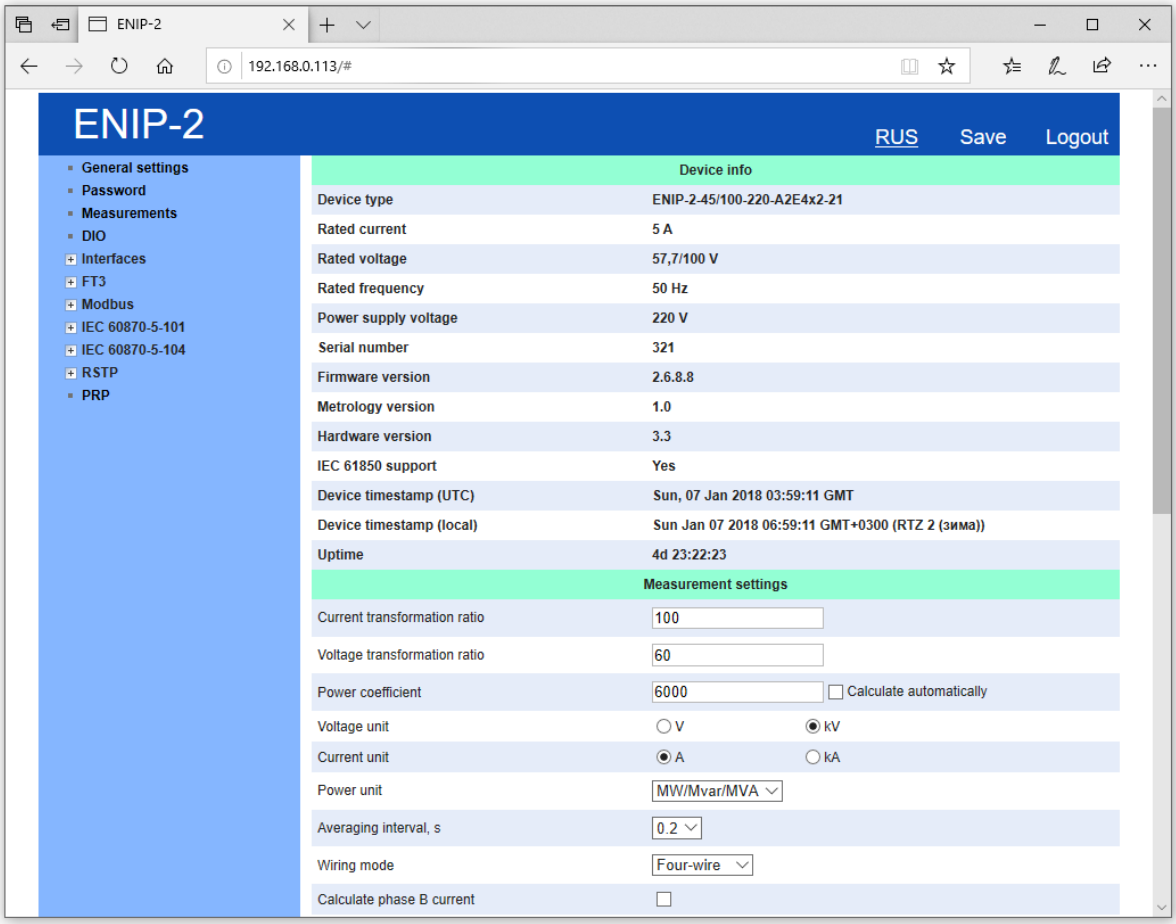

Figure 6.4. Web configuration of ENIP-2

6.4 Reset to default settings

For resetting configuration to default settings, use PC with “ES Bootloader” utility:

- Connect ENIP-2 to COM-port or USB of PC,
- Run "EsBootloader",
- Set connection settings,
- Click Connect,
- Click “Default cfg”,
- Click Reset.

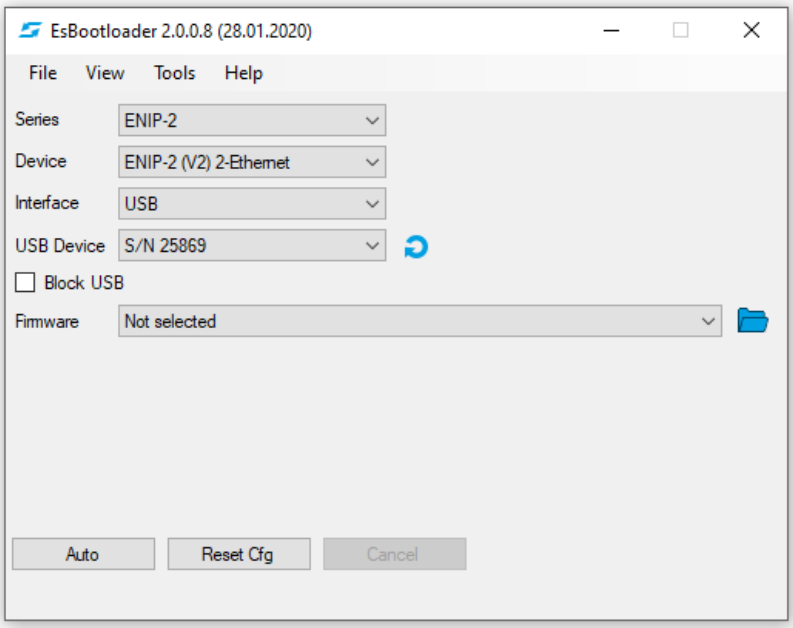

Figure 6.5. “EsBootloader” connected to ENIP-2 with s/n 25869 via USB

7 Maintenance

When performing the maintenance, follow the rules set in the manual. Maintenance is supposed to be performed by qualified personnel only.

Do not open the housing during operation. Opening the ENIP-2 voids the warranty.

ENIP-2 doesn't need special maintenance operations.

For cleaning use non-abrasive detergent or 70% ethanol-water solution.

8 Transportation, packing and storage

ENIP-2 is transported in any covered transport (train, car, airplane). Transport conditions temperature is –50...+70ºC, relative humidity is 95 % at 30ºC. Save ENIP-2 from impact during the transportation.

ENIP-2 is delivered in packaging case. Package contents is according to page 35.

Maximum weight of the device see in table 8.1.

Table 8.1

ENIP-2 modifications	Max net weight, kg	Max gross weight, kg
ENIP-2 Standard	0.55	0.70
ENIP-2 Compact	0.50	0.65

Store the device in dry and clean location. Essential storage conditions are listed in the following table:

Table 8.2

Condition	Device in manufacturer packing	Device without packing
Temperature	5-40 °C	10-35 °C
Relative humidity	80% (at 25 °C)	80% (at 25 °C)

9 Self-diagnostics of ENIP-2

Errors codes of ENIP-2

Error code	Description
0x0001	ADC failure/ no power supply
0x0002	No connection with Ethernet
0x0004	Clock error
0x0008	Low battery voltage
0x0010	Authorization error
0x0020	Internal communications error of ENIP-2 with 2 Ethernet ports
0x0040	Sync time error
0x0080	Extension device error
0x0100	DO error
0x0200	No link LAN-1
0x0400	No link LAN-2

When necessary, diagnostic information can be transmitted via interfaces. There is an option of receiving an error code register using Modbus RTU/TCP, IEC 60870-101/104 protocols. This register contains current set of diagnosed states. It is also possible to transmit the self-diagnostic information in form of DI, choosing which specific parameter or error to pass on (fig. 9.1).

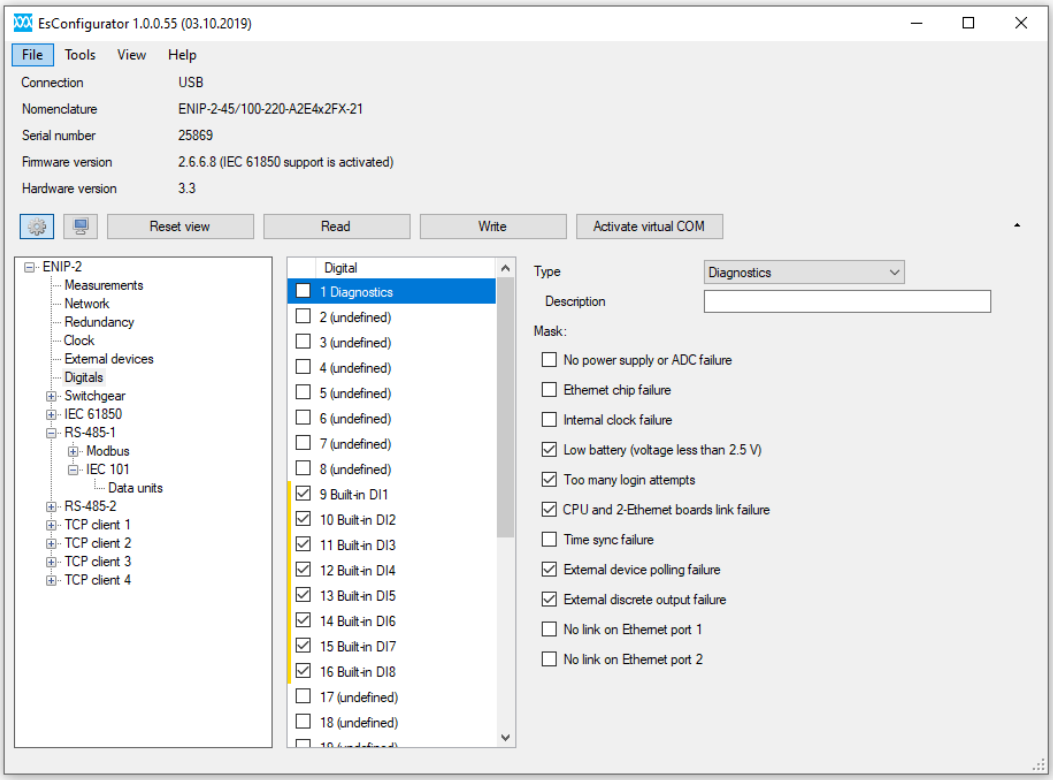

Figure 9.1. Diagnostic information in form of DI

Self-diagnostics also includes temperature measuring inside the device. This could be transmitted by an additional register.

Appendix A1. Wiring diagrams of ENIP-2 Standard

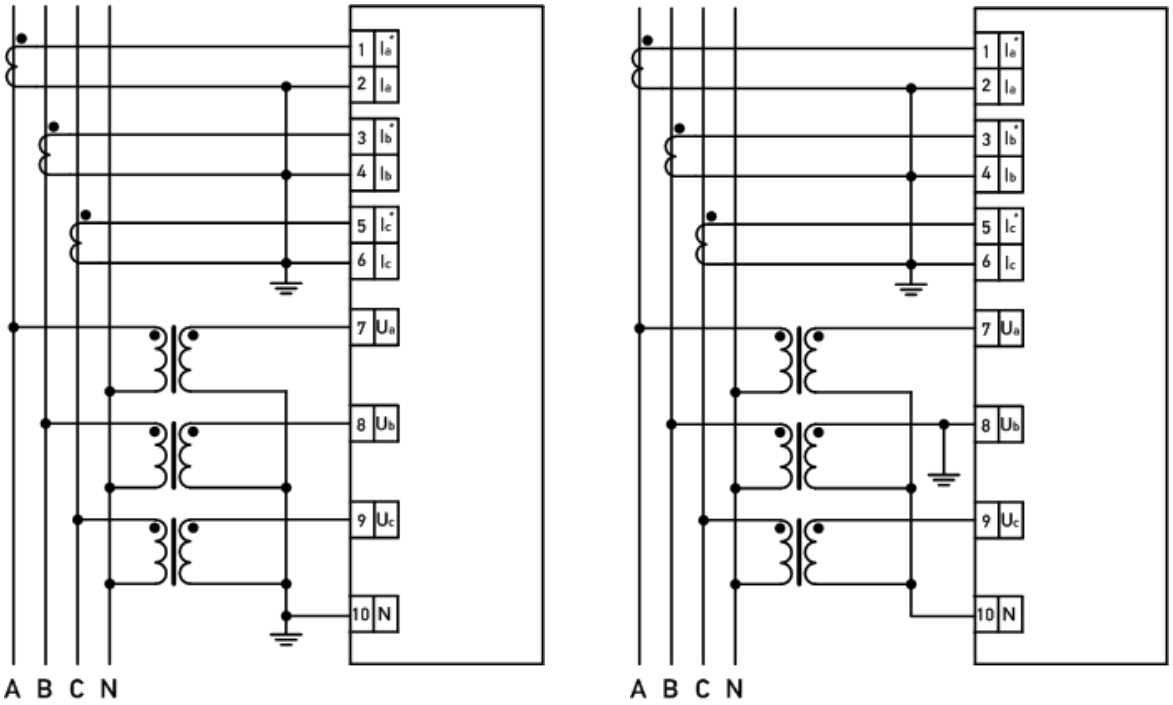

Figure A1.1. ENIP-2-41/100-... and ENIP-2-45/100-... for 4-wire three-phase grid (4-wire measurement mode must be activated)

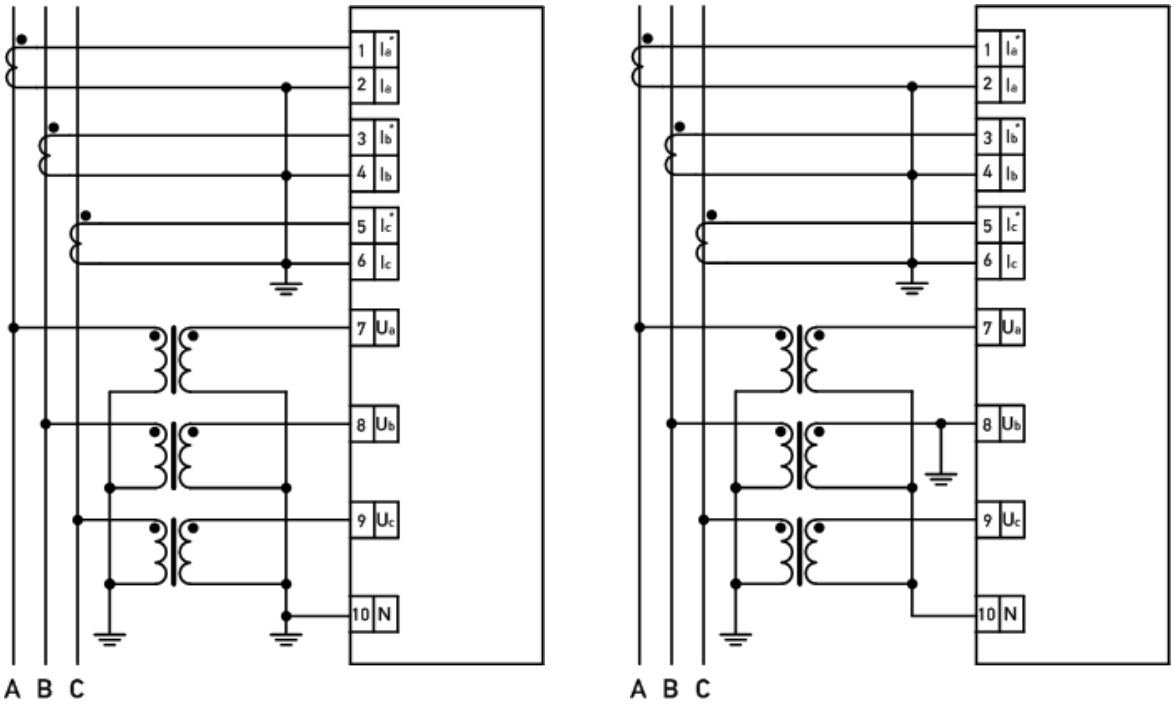

Figure A1.2. ENIP-2-41/100-... and ENIP-2-45/100-... for 3-wire three-phase grid (4-wire measurement mode must be activated)

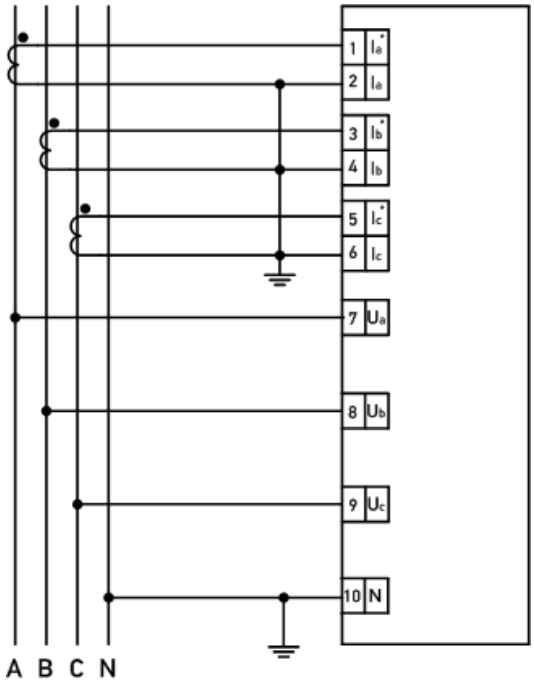

Figure A1.3. ENIP-2-41/400-... and ENIP-2-45/400-... for 4-wire three-phase grid 230(400) V (4-wire measurement mode must be activated)

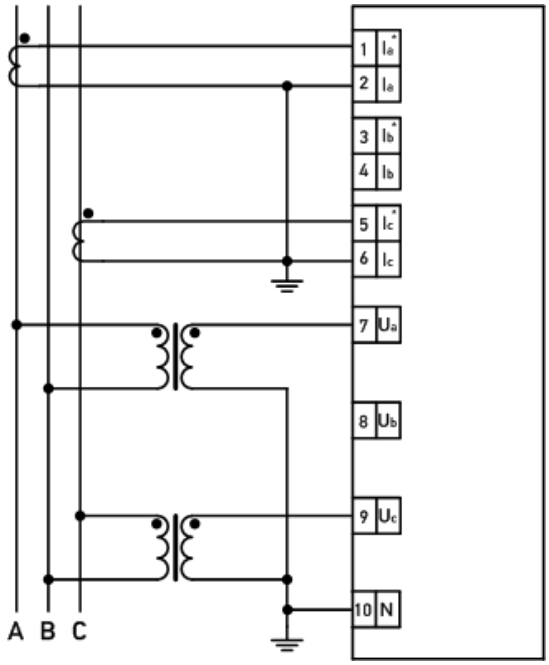

Figure A1.4. ENIP-2-41/100-... and ENIP-2-45/100-... for 3-wire three-phase grid with two PT (3-wire measurement mode must be activated)

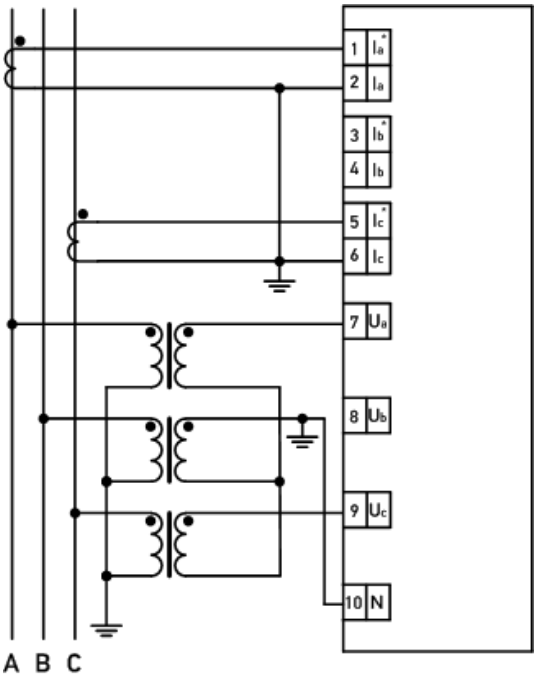

PT connection is Y

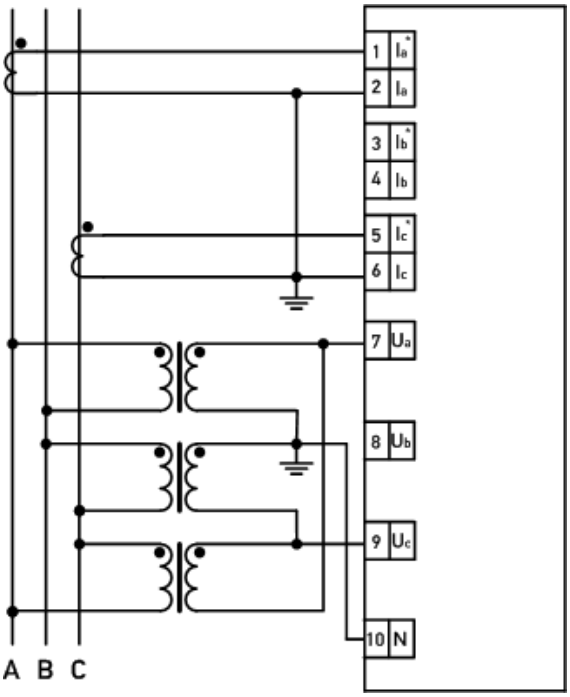

PT connection is Δ

Figure A1.5. ENIP-2-41/100-... and ENIP-2-45/100-... for 3-wire three-phase grid with three PT (3-wire measurement mode must be activated)

Appendix A2. Wiring diagrams of ENIP-2 Compact

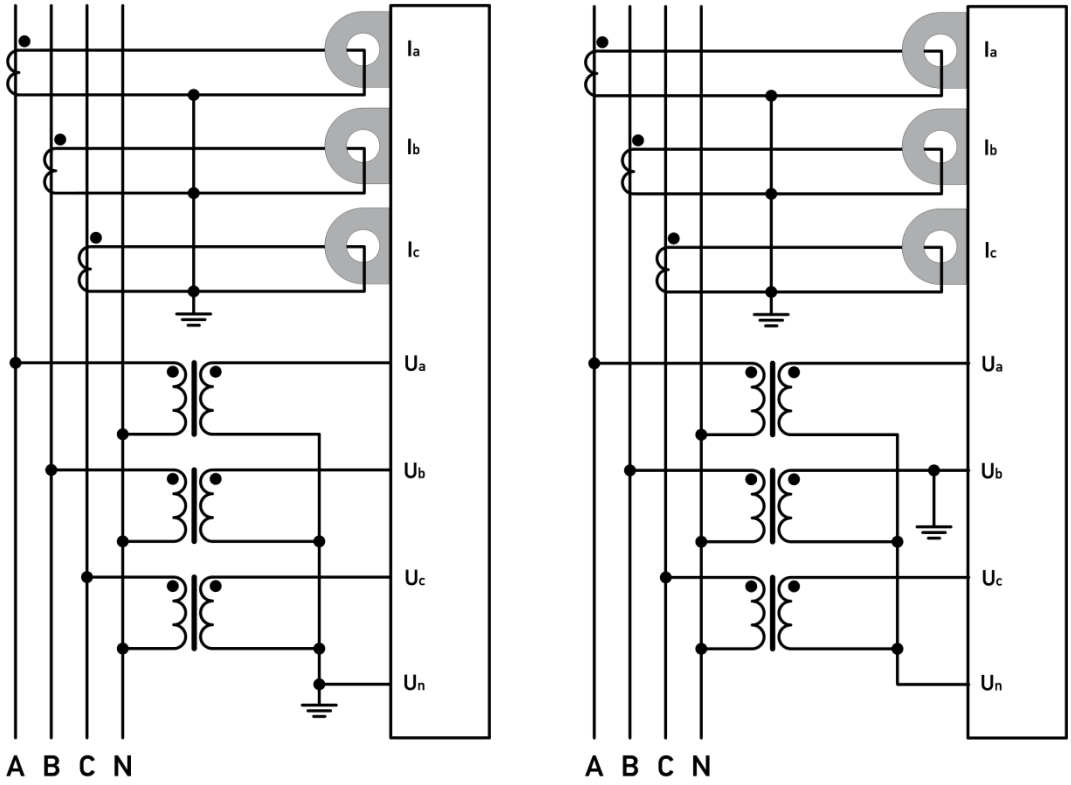

Figure A2.1. ENIP-2-41/100-...-32 and ENIP-2-45/100-...-32 for 4-wire three-phase grid (4-wire measurement mode must be activated)

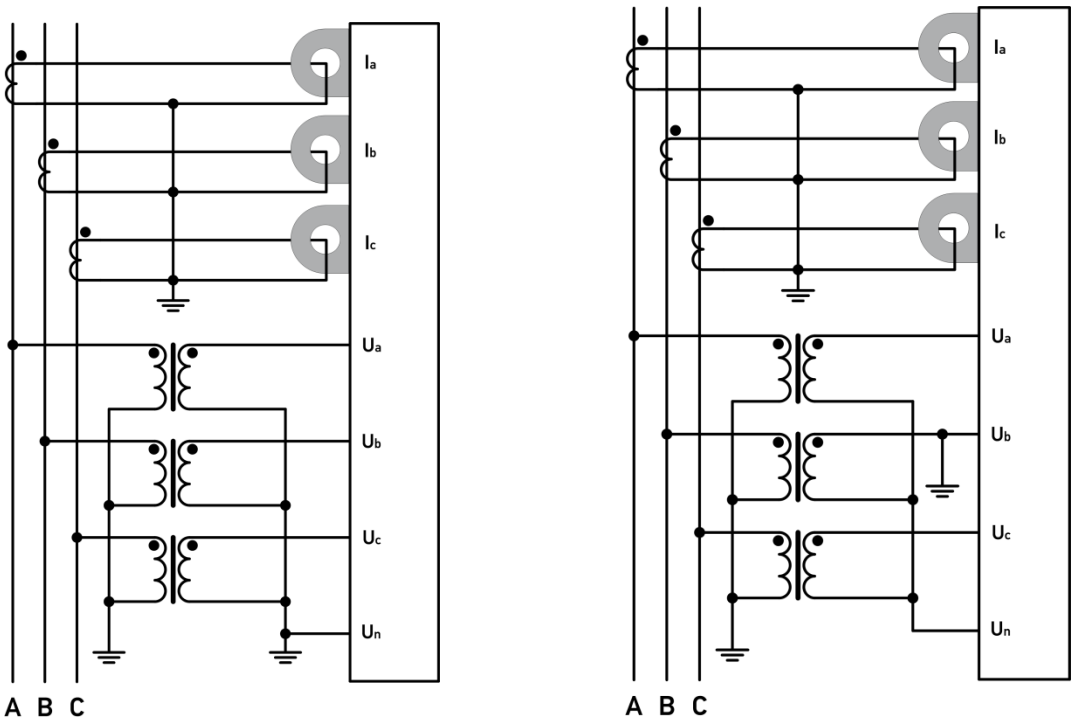

Figure A2.2. ENIP-2-41/100-...-32 and ENIP-2-45/100-...-32 for 3-wire three-phase grid (4-wire measurement mode must be activated)

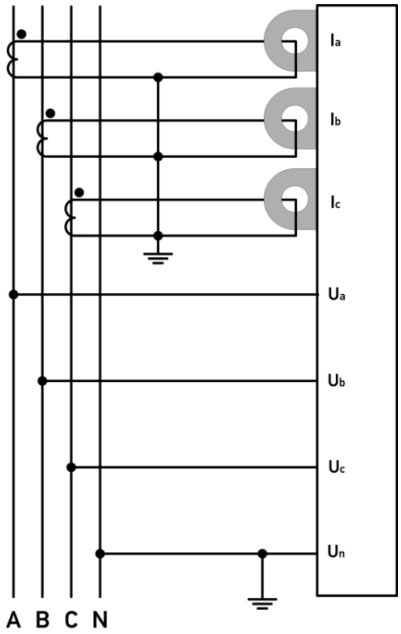

Figure A2.3. ENIP-2-41/400-...-32 and ENIP-2-45/400-...-32 for 4-wire three-phase grid 230(400) (4-wire measurement mode must be activated)

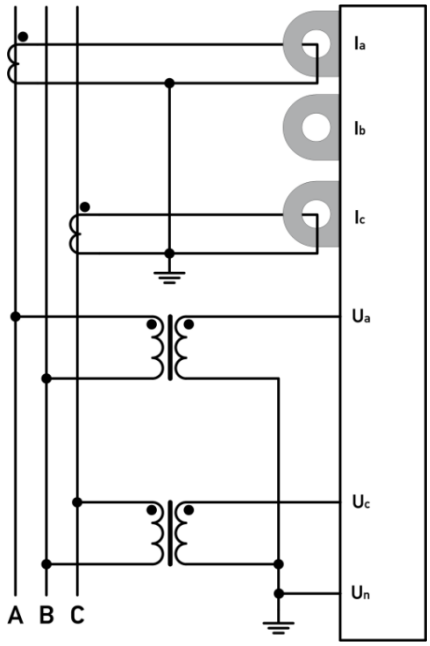

Figure A2.4. ENIP-2-41/100-...-32 and ENIP-2-45/100-...-32 for 4-wire three-phase grid with two PT (3-wire measurement mode must be activated)

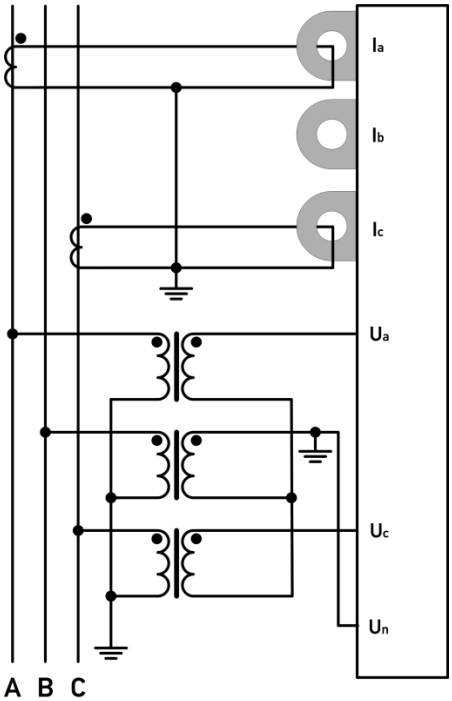

PT connection is Y

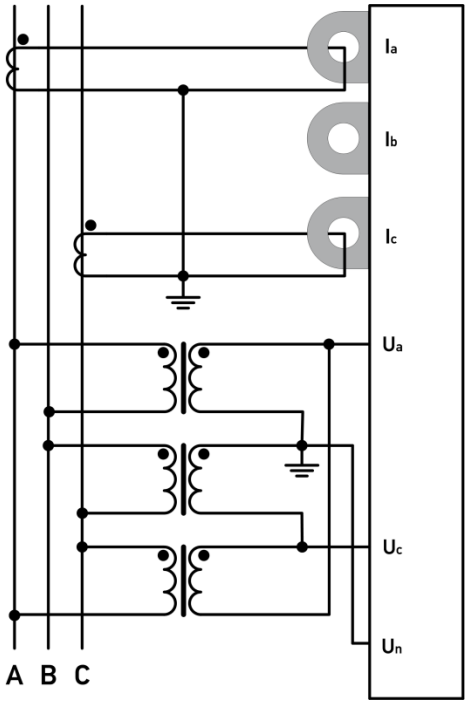

PT connection is Δ

Figure A2.5. ENIP-2-41/100-...-32 and ENIP-2-45/100-...-32 for 3-wire three-phase grid with 3 PT (3-wire measurement mode must be activated)

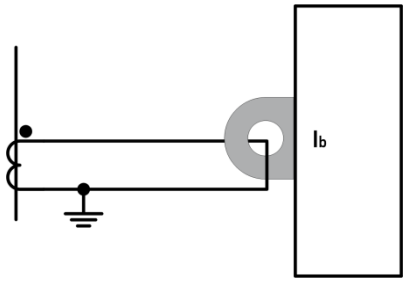

Figure A2.6. ENIP-2-41/100-X-XX-32 and ENIP-2-45/100-X-XX-32 for current measuring in 1 phase

Appendix A3. Wiring diagrams for extension devices

Connection via RS-485:

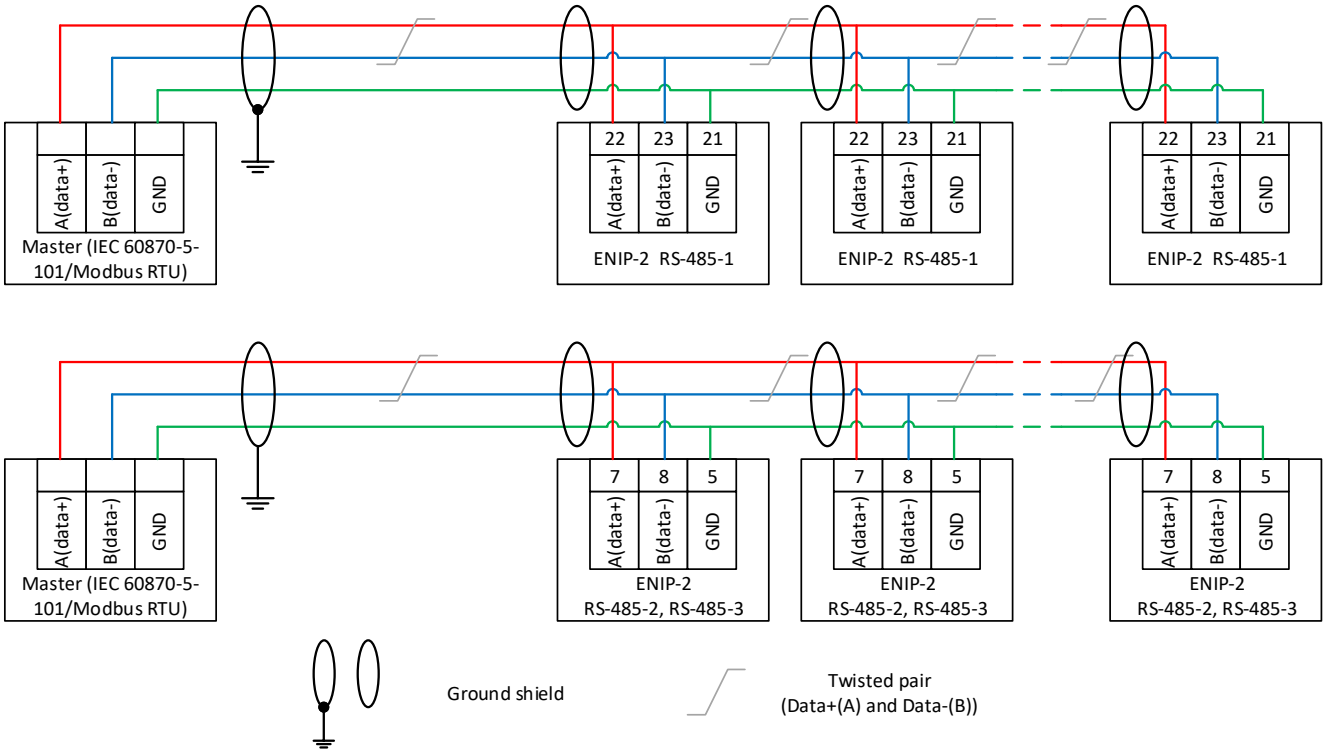

Figure A3.1. RS-485 connection

ENMI

«One ENMI – one ENIP-2»

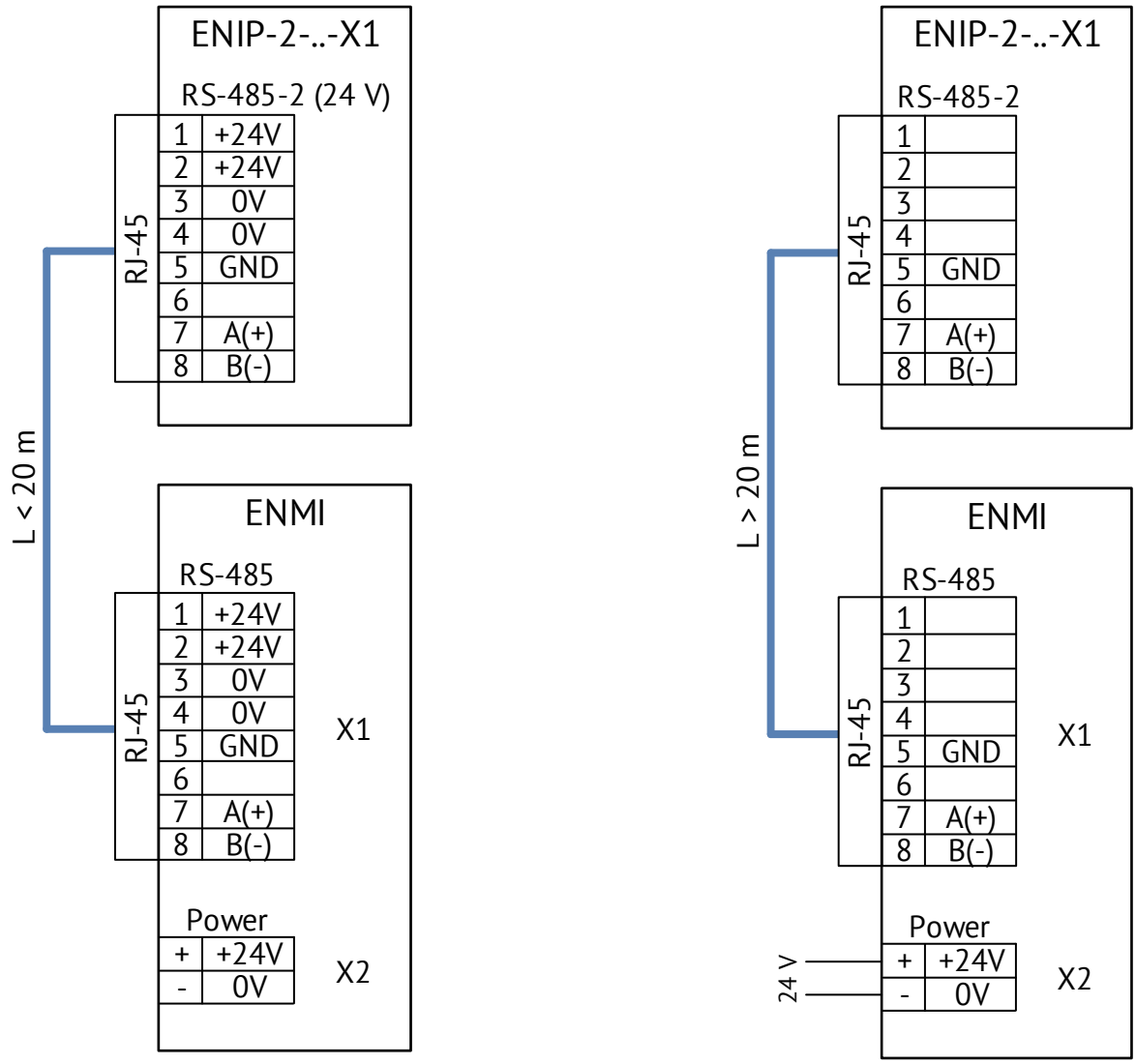

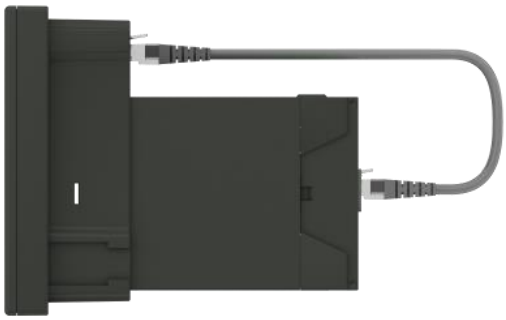

ENIP-2 and ENMI are connected via standard UTP patch cord. Patch cord is used for power supply of ENMI from ENIP-2 (24 V DC) and for connecting it via RS-485.

Figure A3.2. Connection of ENMI and ENIP-2

«one ENMI – several ENIP-2»

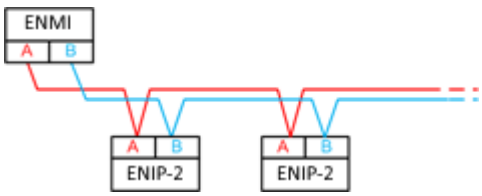

«several ENMI – one ENIP-2»

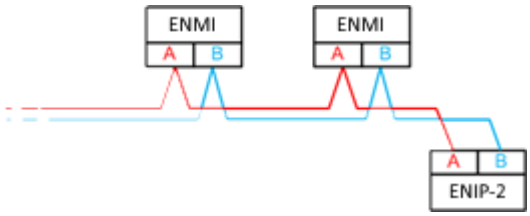

Figure A3.3 – Connection of ENMI and ENIP-2

Power supply

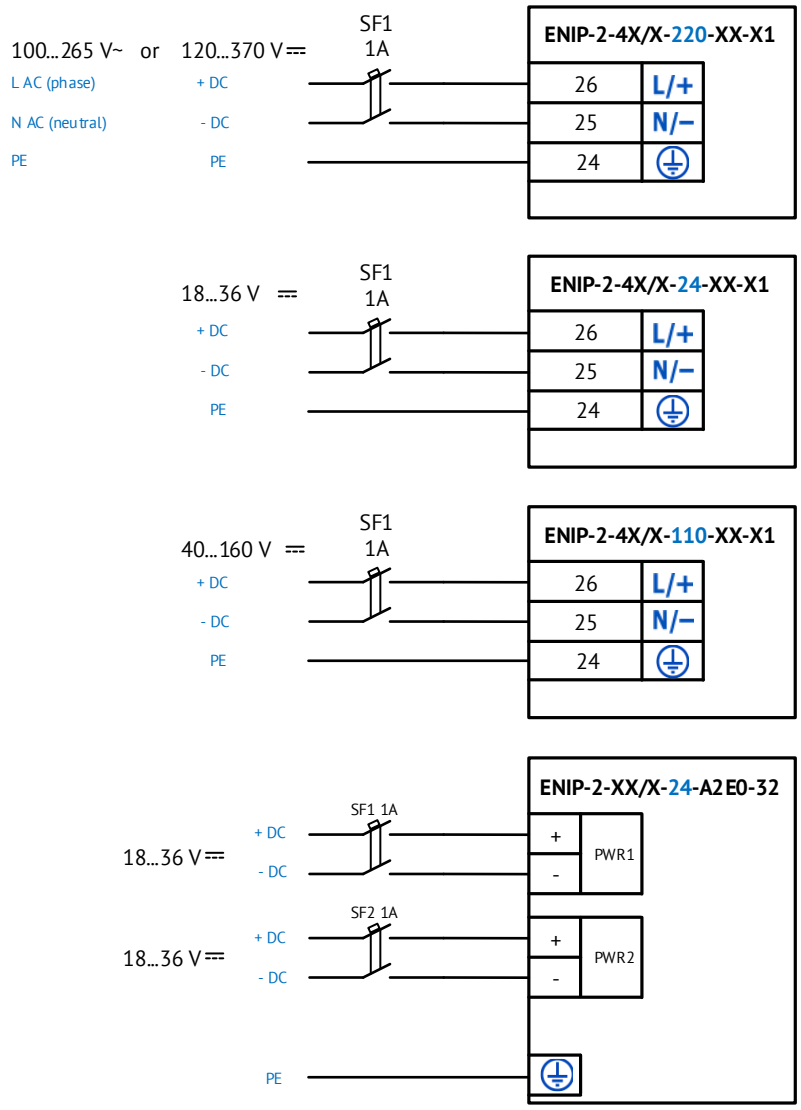

Figure A3.3. Power supply connection diagram

Sensors

Inductive sensor could be used as a door-operated switch. The following is an example of wiring diagram of ENIP-2 and inductive sensor.

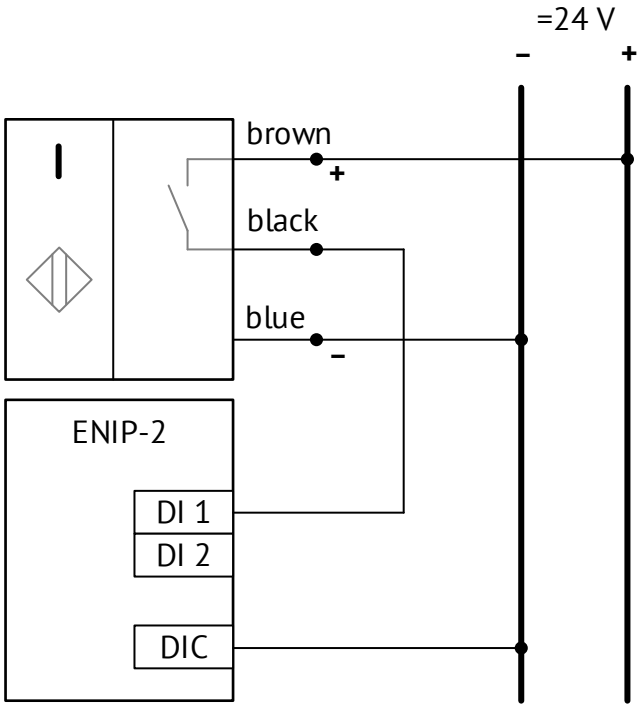

Figure A3.4. Wiring diagram for ENIP-2 and inductive sensor

Digital I/O (including extension module ENMV)

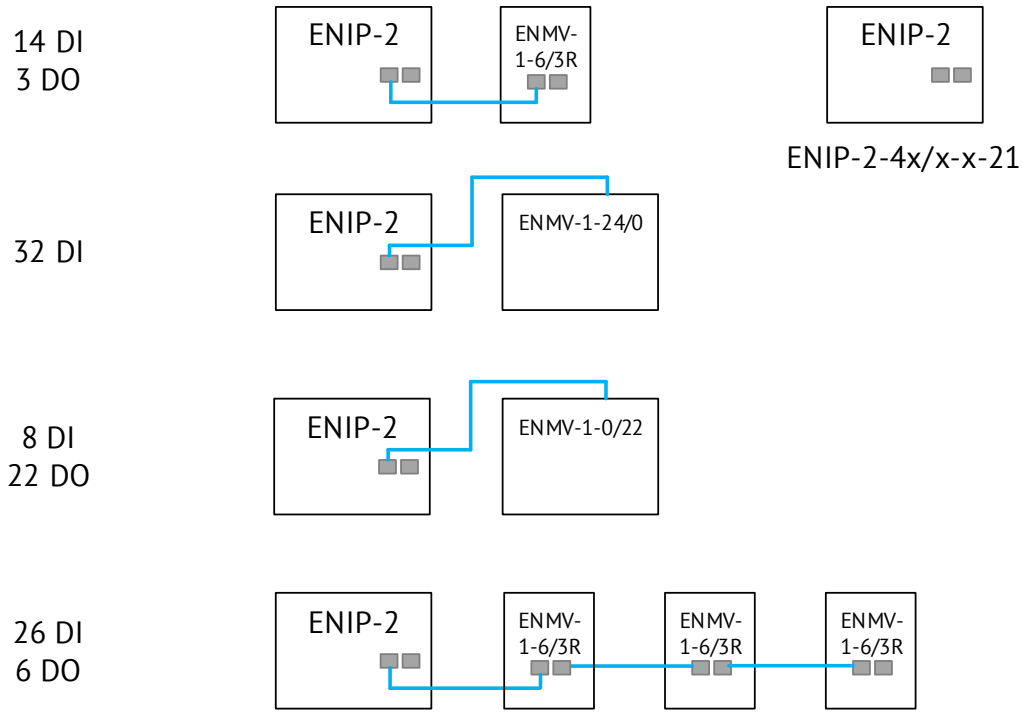

Figure A3.6. Examples of ENMV connections

Appendix B. ENIP-2: Modbus

About Modbus

Modbus (Schneider Electric trademark) is a serial communication protocol. Full description see on www.modbus.org. This protocol is used for data communication via RS-485 or Ethernet interfaces.

Address

Available slave addresses of ENIP-2 are from 01 to 254 (01-hFE). h00 and hFF are multicast addresses. Any device in network responds to the request if it's address is h00. Any device in network executes a command if the request address is hFF.

Available function codes

h01 read coil;

h02 read discrete inputs;

h03 read holding registers;

h04 read input registers;

h05 write single coil;

h06 write single register (reset, fixing data, delete event log);

h14 read file record;

h2B read ID.

Service function codes

h64 service read;

h65 service write.

Exception codes

01 – illegal function

02 – illegal data address

03 – illegal data value

04 – slave device failure

Analog registers

Register addresses range is 0 to 65534. You can change the addresses of values using «ES Configurator» software. Values in registers are saved in integer and float formats.

Available data type:

- Integer

ENIP-2 saves integer at little-endian order.

For the data conversion obtained use the following formulas (x – register's value, y – real value):

Value	**ENIP-2-45/100**	**ENIP-2-41/100**	**ENIP-2-45/400**
Current	x/1000	x/5000	x/1000
Voltage	x/100	x/100	x/25
Power	x/10	x/50	x/2.5
Energy	x/10	x/50	x/2.5
cos(φ), tg (φ)	x/1000	x/1000	x/1000
φ	x/100	x/100	x/100
f (3 decimal places)	x/1000	x/1000	x/1000
f (2 decimal places)	x/100	x/100	x/100
THD	x/1000	x/1000	x/1000

- Float

ENIP-2 float corresponds to IEEE 754.

Default addresses

Address		Quantity of registers	Value	Type
Dec	hex			
Integer RMS				
0	0x00	1	Ua	unsigned short
1	0x01	1	Ub	unsigned short
2	0x02	1	Uc	unsigned short
3	0x03	1	Average U	unsigned short
4	0x04	1	Uab	unsigned short
5	0x05	1	Ubc	unsigned short
6	0x06	1	Uca	unsigned short
7	0x07	1	Average line-to-line U	unsigned short
8	0x08	1	Ia	unsigned short
9	0x09	1	Ib	unsigned short
10	0x0A	1	Ic	unsigned short
11	0x0B	1	Average I	unsigned short
12	0x0C	1	Pa	short
13	0x0D	1	Pb	short
14	0x0E	1	Pc	short
15	0x0F	1	Total P	short
16	0x10	1	Qa	short
17	0x11	1	Qb	short
18	0x12	1	Qc	short

Address		Quantity of registers	Value	Type
Dec	hex			
19	0x13	1	Total Q	short
20	0x14	1	Sa	unsigned short
21	0x15	1	Sb	unsigned short
22	0x16	1	Sc	unsigned short
23	0x17	1	Total S	unsigned short

Integer first harmonic

24	0x18	1	Ua1	unsigned short
25	0x19	1	Ub1	unsigned short
26	0x1A	1	Uc1	unsigned short
27	0x1B	1	Average U1	unsigned short
28	0x1C	1	Uab1	unsigned short
29	0x1D	1	Ubc1	unsigned short
30	0x1E	1	Uca1	unsigned short
31	0x1F	1	Average line-to-line U1	unsigned short
32	0x20	1	Ia1	unsigned short
33	0x21	1	Ib1	unsigned short
34	0x22	1	Ic1	unsigned short
35	0x23	1	Average I1	unsigned short
36	0x24	1	Pa1	short
37	0x25	1	Pb1	short
38	0x26	1	Pc1	short
39	0x27	1	Total P1	short
40	0x28	1	Qa1	short
41	0x29	1	Qb1	short
42	0x2A	1	Qc1	short
43	0x2B	1	Total Q1	short
44	0x2C	1	Sa1	unsigned short
45	0x2D	1	Sb1	unsigned short
46	0x2E	1	Sc1	unsigned short
47	0x2F	1	Total S1	unsigned short

cos, frequency, power quality parameters, energy, quantums, CT/PT ratio, temperature, DIO, timestamp, reserve

48	0x30	1	cos φ, phase A	short
49	0x31	1	cos φ, phase B	short
50	0x32	1	cos φ, phase C	short
51	0x33	1	cos φ, total	short
52	0x34	1	F	unsigned short
53	0x35	1	U0 – voltage zero sequence	unsigned short
54	0x36	1	U1 - voltage positive sequence	unsigned short
55	0x37	1	U2 – voltage negative sequence	unsigned short
56	0x38	1	KuU – voltage unbalance	unsigned short
57	0x39	1	KdU – voltage distortion	unsigned short
58	0x3A	1	I0 - current zero sequence	unsigned short
59	0x3B	1	I1 - ток positive sequence	unsigned short
60	0x3C	1	I2 - ток negative sequence	unsigned short
61	0x3D	1	KuI – current unbalance	unsigned short
62	0x3E	1	KdI – current distortion	unsigned short
63	0x3F	1	THD - total harmonic distortion	short
64	0x40	2	WP+ active energy, forward direction	unsigned long
66	0x42	2	WP- active energy, reverse direction	unsigned long
68	0x44	2	WQ+ reactive energy, forward direction	unsigned long

Address		Quantity of registers	Value	Type
Dec	hex			
70	0x46	2	WQ- reactive energy, reverse direction	unsigned long
72	0x48	2	DIO – DI/DO status	unsigned long
74	0x4A	2	Time - timestamp UTC, seconds	unsigned long
76	0x4C	1	Time - timestamp UTC, milliseconds	unsigned short
77	0x4D	1	T – inside temperature	short
78	0x4E	1	KU – PT ratio	unsigned short
79	0x4F	1	KI – CT ratio	unsigned short
80	0x50	1	QU – voltage quantum	unsigned short
81	0x51	1	QI – current quantum	unsigned short
82	0x52	1	reserve	
83	0x53	1	reserve	

ENIP-2-...-32 integer values:

84	0x54	1	UL1	unsigned short
85	0x55	1	UL2	unsigned short
86	0x56	1	UL3	unsigned short
87	0x57	1	reserve	
88	0x58	1	reserve	
89	0x59	1	diagnostic	short
90	0x5A	1	reserve	
91	0x5B	1	reserve	

Float RMS

92	0x5C	2	Ua	float
94	0x5E	2	Ub	float
96	0x60	2	Uc	float
98	0x62	2	Average U	float
100	0x64	2	Uab	float
102	0x66	2	Ubc	float
104	0x68	2	Uca	float
106	0x6A	2	Average line-to-line U	float
108	0x6C	2	Ia	float
110	0x6E	2	Ib	float
112	0x70	2	Ic	float
114	0x72	2	Average I	float
116	0x74	2	Pa	float
118	0x76	2	Pb	float
120	0x78	2	Pc	float
122	0x7A	2	Total P	float
124	0x7C	2	Qa	float
126	0x7E	2	Qb	float
128	0x80	2	Qc	float
130	0x82	2	Total Q	float
132	0x84	2	Sa	float
134	0x86	2	Sb	float
136	0x88	2	Sc	float
138	0x8A	2	Total S	float

Float first harmonic

140	0x8C	2	Ua1	float
142	0x8E	2	Ub1	float
144	0x90	2	Uc1	float
146	0x92	2	Average U1	float
148	0x94	2	Uab1	float

Address		Quantity of registers	Value	Type
Dec	hex			
150	0x96	2	Ubc1	float
152	0x98	2	Uca1	float
154	0x9A	2	Average line-to-line U1	float
156	0x9C	2	Ia1	float
158	0x9E	2	Ib1	float
160	0xA0	2	Ic1	float
162	0xA2	2	Average I1	float
164	0xA4	2	Pa1	float
166	0xA6	2	Pb1	float
168	0xA8	2	Pc1	float
170	0xAA	2	Total P1	float
172	0xAC	2	Qa1	float
174	0xAE	2	Qb1	float
176	0xB0	2	Qc1	float
178	0xB2	2	Total Q1	float
180	0xB4	2	Sa1	float
182	0xB6	2	Sb1	float
184	0xB8	2	Sc1	float
186	0xBA	2	Total S1	float

cos, frequency, power quality parameters

188	0xBC	2	cos φ, phase A	float
190	0xBE	2	cos φ, phase B	float
192	0xC0	2	cos φ, phase C	float
194	0xC2	2	cos φ, total	float
196	0xC4	2	F	float
198	0xC6	2	U0 – voltage zero sequence	float
200	0xC8	2	U1 - voltage positive sequence	float
202	0xCA	2	U2 – voltage negative sequence	float
204	0xCC	2	KuU – voltage unbalance	float
206	0xCE	2	KdU – voltage distortion	float
208	0xD0	2	I0 - current zero sequence	float
210	0xD2	2	I1 - ток positive sequence	float
212	0xD4	2	I2 - ток negative sequence	float
214	0xD6	2	KuI – current unbalance	float
216	0xD8	2	KdI – current distortion	float
218	0xDA	2	THD - total harmonic distortion	float
220	0xDC	2	External AI1	float
222	0xDE	2	External AI2	float
224	0xE0	2	External AI3	float
226	0xE2	2	External AI4	float
228	0xE4	2	P0	float
230	0xE6	2	Q0	float
232	0xE8	2	External AI5	float
234	0xEA	2	External AI6	float
236	0xEC	2	External AI7	float
238	0xEE	2	External AI8	float
240	0xF0	2	External AI9	float
242	0xF2	2	External AI10	float
244	0xF4	1	External AI1	short
245	0xF5	1	External AI2	short
246	0xF6	1	External AI3	short

Address		Quantity of registers	Value	Type
Dec	hex			
247	0xF7	1	External AI4	short
248	0xF8	1	External AI5	short
249	0xF9	1	External AI6	short
250	0xFA	1	External AI7	short
251	0xFB	1	External AI8	short
252	0xFC	1	External AI9	short
253	0xFD	1	External AI10	short

Discrete information

Any DIO is configured independently. Available function for DIO are in the Table 3.3.

Default configuration:

Address		**Value**
dec	**hex**	
0	0x00	DIO1
1	0x01	DIO2
2	0x02	DIO3
3	0x03	DIO4
4	0x04	DIO5
5	0x05	DIO6
6	0x06	DIO7
7	0x07	DIO8
8	0x08	DIO9 (DI1)
9	0x09	DIO10 (DI2)
10	0x0A	DIO11 (DI3)
11	0x0B	DIO12 (DI4)
12	0x0C	DIO13 (DI5)
13	0x0D	DIO14 (DI6)
14	0x0E	DIO15 (DI7)
15	0x0F	DIO16 (DI8)
16	0x10	DIO17
17	0x11	DIO18
18	0x12	DIO19
19	0x13	DIO20
20	0x14	DIO21
21	0x15	DIO22
22	0x16	DIO23
23	0x17	DIO24
24	0x18	DIO25
25	0x19	DIO26
26	0x1A	DIO27
27	0x1B	DIO28
28	0x1C	DIO29
29	0x1D	DIO30
30	0x1E	DIO31
31	0x1F	DIO32

Here is an example of request with function code 01 if ENIP-2 has slave address 01, DIO requested from 2 to 13

Slave address	Function code	Data address of the first coil		Number of coil		CRC	
01	01	00	01	00	0C	9D	CF

And this is the response to previous request

01	01	02	00	51	78

Second and third byte describe DIO status

byte	02								00							
bit	0	0	0	0	0	0	1	0	0	0	0	0	0	0	0	0
DIO	9	8	7	6	5	4	3	2					13	12	11	10

Appendix C. ENIP-2: IEC 60870-5-101 and IEC 60870-5-104

Available ASDU

Value	ASDU		Description
Digital signals	1	M_SP_NA_1	Single-point information
	3	M_DP_NA_1	Double-point information
	30	M_SP_TB_1	Single-point information with time tag CP56
	31	M_DP_TB_1	Double-point information with time tag CP56
Measured value	11	M_ME_NB_1	Measured value, scaled value
	13	M_ME_NC_1	Measured value, short floating point value
	35	M_ME_TE_1	Measured value, scaled value with time tag CP56
	36	M_ME_TF_1	Measured value, short floating point value with time tag CP56
Integrated totals	15	M_IT_NA_1	Integrated totals
	37	M_IT_TB_1	Integrated totals with time tag CP56

Default register's addresses of ENIP-2-...-X1:

address	Parameter		ASDU type		Quantum (for type 11,13,35,37)
Digital signals					
1	DI1	Built-in	1/30	3/31	-
2	DI2	Built-in	1/30		-
3	DI3	Built-in	1/30	3/31	-
4	DI4	Built-in	1/30		-
5	DI5	Built-in	1/30	3/31	-
6	DI6	Built-in	1/30		-
7	DI7	Built-in	1/30	3/31	-
8	DI8	Built-in	1/30		-
RMS					
100	Ua		11/13/35/36		Uquant, V
101	Ub		11/13/35/36		Uquant, V
102	Uc		11/13/35/36		Uquant, V
103	Average U		11/13/35/36		Uquant, V
104	Uab		11/13/35/36		Uquant, V
105	Ubc		11/13/35/36		Uquant, V
106	Uca		11/13/35/36		Uquant, V
107	Average line-to-line U		11/13/35/36		Uquant, V
108	Ia		11/13/35/36		Iquant, A
109	Ib		11/13/35/36		Iquant, A
110	Ic		11/13/35/36		Iquant, A
111	Average I		11/13/35/36		Iquant, A
112	Pa		11/13/35/36		Pquant, W
113	Pb		11/13/35/36		Pquant, W
114	Pc		11/13/35/36		Pquant, W
115	Total P		11/13/35/36		Pquant, W
116	Qa		11/13/35/36		Qquant, var
117	Qb		11/13/35/36		Qquant, var
118	Qc		11/13/35/36		Qquant, var
119	Total Q		11/13/35/36		Qquant, var
120	Sa		11/13/35/36		Squant, VA
121	Sb		11/13/35/36		Squant, VA

address	Parameter	ASDU type	Quantum (for type 11,13,35,37)
124	Sc	11/13/35/36	Squant, VA
123	Total S	11/13/35/36	Squant, VA

First harmonic

0	Ua	11/13/35/36	Uquant, V
0	Ub	11/13/35/36	Uquant, V
0	Uc	11/13/35/36	Uquant, V
0	Average U	11/13/35/36	Uquant, V
0	Uab	11/13/35/36	Uquant, V
0	Ubc	11/13/35/36	Uquant, V
0	Uca	11/13/35/36	Uquant, V
0	Average line-to-line U	11/13/35/36	Uquant, V
0	Ia	11/13/35/36	Iquant, A
0	Ib	11/13/35/36	Iquant, A
0	Ic	11/13/35/36	Iquant, A
0	Average I	11/13/35/36	Iquant, A
0	Pa	11/13/35/36	Pquant, W
0	Pb	11/13/35/36	Pquant, W
0	Pc	11/13/35/36	Pquant, W
0	Total P	11/13/35/36	Pquant, W
0	Qa	11/13/35/36	Qquant, var
0	Qb	11/13/35/36	Qquant, var
0	Qc	11/13/35/36	Qquant, var
0	Total Q	11/13/35/36	Qquant, var
0	Sa	11/13/35/36	Squant, VA
0	Sb	11/13/35/36	Squant, VA
0	Sc	11/13/35/36	Squant, VA
0	Total S	11/13/35/36	Squant, VA

COS, frequency, quality

124	cos φ, phase A	11/13/35/36	0,001
125	cos φ, phase B	11/13/35/36	0,001
126	cos φ, phase C	11/13/35/36	0,001
127	cos φ, total	11/13/35/36	0,001
128	F	11/13/35/36	0,001 Hz
0	U0 – voltage zero sequence	11/13/35/36	Uquant, B
0	U1 - voltage positive sequence	11/13/35/36	Uquant, B
0	U2 – voltage negative sequence	11/13/35/36	Uquant, B
0	KuU – voltage unbalance	11/13/35/36	0,1 %
0	KdU – voltage distortion	11/13/35/36	0,1 %
0	I0 - current zero sequence	11/13/35/36	Iquant, A
0	I1 - ток positive sequence	11/13/35/36	Iquant, A
0	I2 - ток negative sequence	11/13/35/36	Iquant, A
0	KuI – current unbalance	11/13/35/36	0,1 %
0	KdI – current distortion	11/13/35/36	0,1 %
0	THD - total harmonic distortion	11/13/35/36	0,1 %
0	T – inside temperature	11/13/35/36	1 °C

Service registers

0	Diagnostic	11/13/35/36	1
0	Reserve	11/13/35/36	-

address	Parameter	ASDU type	Quantum (for type 11,13,35,37)
	Energy		
0	WP+ active energy, forward direction	15/37	Wquant, Вт/ч
0	WP- active energy, reverse direction	15/37	Wquant, Вт/ч
0	WQ+ reactive energy, forward direction	15/37	Wquant, Вар/ч
0	WQ- reactive energy, reverse direction	15/37	Wquant, Вар/ч
	Files		
40000	Event log, txt	-	-
50000	DI log txt	-	-

* Addresses are marked by gray font is not available by default. You can activate them using «ES Configurator»

quantum	Description	Quantum value		
		I = 5 A		I = 1 A
		U = 57,7 V	U = 220 V	U = 57,7 V
Iquant	Current quantum; A	0,001		0,0002
Uquant	Voltage quantum; V	0,01	0,04	0,01
P/Q/S/Wquant	Power/Energy quantum; W, var, VA/Wh, varh	0,1	0,4	0,02

IEC 60870-5-101/104 Protocol Implementation Conformance Statement

This companion standard presents sets of parameters and alternatives from which subsets have to be selected to implement particular telecontrol systems. Certain parameter values, such as the number of octets in the COMMON ADDRESS of ASDUs represent mutually exclusive alternatives. This means that only one value of the defined parameters is admitted per system. Other parameters, such as the listed set of different process information in command and in monitor direction allow the specification of the complete set or subsets, as appropriate for given applications. This Clause summarizes the parameters of the previous Clauses to facilitate a suitable selection for a specific application. If a system is composed of equipment stemming from different manufacturers, it is necessary that all partners agree on the selected parameters.

Designation:

☐ - Function or ASDU is not used;

☒ - Function or ASDU is used as standardized (default);

R - Function or ASDU is used in reverse mode;

B - Function or ASDU is used in standard and reverse mode/

The possible selection (blank, X, R, or B) is specified for each specific Clause or parameter.

1. System or device

(system-specific parameter, indicate the definition of a system or a device by marking one of the following with an «X»)

IEC 60870-5-101	IEC 60870-5-104
☐ System definition	☐ System definition
☐ Controlling station definition (master)	☐ Controlling station definition (master)
☒ Controlled station definition (slave)	☐ Controlled station definition (slave)

2. Network configuration

IEC 60870-5-101	
☒ Point-to-point	☐ Multipoint-partyline
☒ Multiple point-to-point	☐ Multipoint-star

IEC 60870-5-104	
~~■ Point-to-point~~	~~■ Multipoint-partyline~~
~~■ Multiple point-to-point~~	~~■ Multipoint-star~~

3. Physical layer

(network-specific parameter, all interfaces and data rates that are used are to be marked with an «X»)

Transmission speed (control direction)

IEC 60870-5-101		
Unbalanced interchange circuit V.24/V.28 Standard	Unbalanced interchange circuit V.24/V.28 recommended if >1200 bit/s	Balanced interchange circuit X.24/X.27
☐ 100bit/s	☒ 2400bit/s	☐ 2400bit/s
☐ 200bit/s	☒ 4800bit/s	☐ 4800bit/s
☐ 300bit/s	☒ 9600bit/s	☐ 9600bit/s
☒ 600bit/s	☒ 19200bit/s	☐ 19200bit/s
☒ 1200bit/s	☒ 38400 bit/s	☐ 38400bit/s
	☒ 57600 bit/s	☐ 56000bit/s
	☒ 115200 bit/s	☐ 64000bit/s

IEC 60870-5-104			
Unbalanced interchange circuit V.24/V.28 Standard	Unbalanced interchange circuit V.24/V.28 recommended if >1200 bit/s	Balanced interchange circuit X.24/X.27	
~~■ 100bit/s~~	~~■ 2400bit/s~~	~~■2400bit/s~~	~~■38400bit/s~~
~~■ 200bit/s~~	~~■ 4800bit/s~~	~~■4800bit/s~~	~~■56000bit/s~~
~~■ 300bit/s~~	~~■ 9600bit/s~~	~~■9600bit/s~~	~~■64000bit/s~~
~~■ 600bit/s~~		~~■19200bit/s~~	

~~■ 1200bit/s~~		

Transmission speed (monitor direction)

IEC 60870-5-101		
Unbalanced interchange circuit V.24/V.28 Standard	Unbalanced interchange circuit V.24/V.28 recommended if >1200 bit/s	Balanced interchange circuit X.24/X.27
☐ 100bit/s ☐ 200bit/s ☐ 300bit/s ☒ 600bit/s ☒ 1200bit/s	☒ 2400bit/s ☒ 4800bit/s ☒ 9600bit/s ☒ 19200bit/s ☒ 38400 bit/s ☒ 57600 bit/s ☒ 115200 bit/s	☐ 2400bit/s ☐ 4800bit/s ☐ 9600bit/s ☐ 19200bit/s ☐ 38400bit/s ☐ 56000bit/s ☐ 64000bit/s

IEC 60870-5-104		
Unbalanced interchange circuit V.24/V.28 Standard	Unbalanced interchange circuit V.24/V.28 recommended if >1200 bit/s	Balanced interchange circuit X.24/X.27
~~■ 100bit/s~~ ~~■ 200bit/s~~ ~~■ 300bit/s~~ ~~■ 600bit/s~~ ~~■ 1200bit/s~~	~~■ 2400bit/s~~ ~~■ 4800bit/s~~ ~~■ 9600bit/s~~	~~■2400bit/s~~ ~~■38400bit/s~~ ~~■4800bit/s~~ ~~■56000bit/s~~ ~~■9600bit/s~~ ~~■64000bit/s~~ ~~■19200bit/s~~

4. Link layer

Network-specific parameter, all options that are used are to be marked with an "×". Specify the maximum frame length. If a non-standard assignment of class 2 messages is implemented for unbalanced transmission, indicate the type ID and COT of all messages assigned to class 2.

IEC 60870-5-101

Frame format FT 1.2, single character 1 and the fixed time out interval are used exclusively in this companion standard.

Link transmission procedure	Address field of the link
☐ Balanced transmission ☒ Unbalanced transmission	☐ Not present (balanced transmission only) ☒ One octet ☐ Two octets ☐ Structured ☒ Unstructured
Frame length 255 Maximum length L (control direction) 255 Maximum length L (monitor direction) 5 - repetitions Time during which repetitions are permitted (Trp) or number of repetitions	

When using an unbalanced link layer, the following ASDU types are returned in class 2 messages (low priority) with the indicated causes of transmission:

☐ The standard assignment of ASDUs to class 2 messages is used as follows:

Type identification	Cause of transmission

☒ A special assignment of ASDUs to class 2 messages is used as follows:

Type identification	Cause of transmission
1, 3, 11, 13, 15, 30, 31, 35, 36,37	<3>

~~NOTE: In response to a class 2 poll, a controlled station may respond with class 1 data when there is no class 2 data available.~~

IEC 60870-5-104

Frame format FT 1.2, single character 1 and the fixed time out interval are used exclusively in this companion standard.

Link transmission procedure	Address field of the link
~~■ Balanced transmission~~ ~~■ Unbalanced transmission~~	~~■ Not present (balanced transmission only)~~ ~~■ One octet~~ ~~■ Two octets~~ ~~■ Structured~~ ~~■ Unstructured~~
Frame length ~~■ Maximum length L~~	

When using an unbalanced link layer, the following ASDU types are returned in class 2 messages (low priority) with the indicated causes of transmission:

■ ~~The standard assignment of ASDUs to class 2 messages is used as follows:~~

Type identification	Cause of transmission

■ ~~A special assignment of ASDUs to class 2 messages is used as follows:~~

Type identification	Cause of transmission

5. Application layer

Transmission mode for application data Mode 1 (least significant octet first), as defined in 4.10 of IEC 60870-5-4, is used exclusively in this companion standard.

Common address of ASDU

(system-specific parameter, all configurations that are used are to be marked with an X).

IEC 60870-5-101	IEC 60870-5-104
☒ One octet ☒ Two octets	■ ~~One octet~~ ■ Two octets

Information object address

(system-specific parameter, all configurations that are used are to be marked with an X).

IEC 60870-5-101			
☐	One octet	☒	Structured
☒	Two octets	☒	Unstructured
☒	Three octets		

IEC 60870-5-104			
■	One octet	☐	Structured
■	Two octets	B	Unstructured
X	Three octets		

Cause of transmission

(system-specific parameter, all configurations that are used are to be marked with an X).

IEC 60870-5-101			
☒	One octet	☒	Two octets (with originator address)

IEC 60870-5-104			
■	~~One octet~~	☒	Two octets (with originator address)

Originator address is set to zero if not used

Selection of standard ASDUs

Process information in monitor direction

Type identification and cause of transmission assignments

((station-specific parameters).

IEC 60870-5-104																	
Type identification		Cause of transmission															
		1	2	3	4	5	6	7	8	9	10	11	12	13	20-36	37-41	44-47
<1>	M_SP_NA_1		X	X											X		
<2>	M_SP_TA_1																
<3>	M_DP_NA_1		X	X											X		
<4>	M_DP_TA_1																
<5>	M_ST_NA_1																
<6>	M_ST_TA_1																
<7>	M_BO_NA_1																
<8>	M_BO_TA_1																

<9>	M_ME_NA_1																
<10>	M_ME_TA_1																
<11>	M_ME_NB_1	X	X	X											X		
<12>	M_ME_TB_1																
<13>	M_ME_NC_1	X	X	X											X		
<14>	M_ME_TC_1																
<15>	M_IT_NA_1			X												X	
<16>	M_IT_TA_1																
<17>	M_EP_TA_1																
<18>	M_EP_TB_1																
<19>	M_EP_TC_1																
<20>	M_PS_NA_1																
<21>	M_ME_ND_1																
<30>	M_SP_TB_1			X													
<31>	M_DP_TB_1			X													
<32>	M_ST_TB_1																
<33>	M_BO_TB_1																
<34>	M_ME_TD_1																
<35>	M_ME_TE_1			X													
<36>	M_ME_TF_1			X													
<37>	M_IT_TB_1			X												X	
<38>	M_EP_TD_1																
<39>	M_IT_TB_1																
<40>	M_EP_TD_1																
<45>	C_SC_NA_1						R	R	R	R	R						R
<46>	C_DC_NA_1						R	R	R	R	R						R
<47>	C_RC_NA_1																
<48>	C_SE_NA_1																
<49>	C_SE_NB_1																
<50>	C_SE_NC_1																
<51>	C_BO_NA_1																
<70>	M_EI_NA_1																
<100>	C_IC_NA_1						R	R	R	R	R						
<101>	C_CI_NA_1						R	R			R						
<102>	C_RD_NA_1					R											R
<103>	C_CS_NA_1						R	R									R
<104>	C_TS_NA_1																
<105>	C_RP_NA_1																
<106>	C_CD_NA_1																
<110>	P_ME_NA_1																
<111>	P_ME_NB_1																
<112>	P_ME_NC_1																
<113>	P_AC_NA_1																
<120>	F_FR_NA_1													X			
<121>	F_SR_NA_1													X			
<122>	F_SC_NA_1													X			
<123>	F_LS_NA_1													X			
<124>	F_AF_NA_1													X			
<125>	F_CG_NA_1													X			
<126>	F_DR_TA_1																

IEC 60870-5-101	
Type identification	Cause of transmission

		1		1		1		1		1		1		1		1	
<1>	M_SP_NA_1		X	X											X		
<2>	M_SP_TA_1																
<3>	M_DP_NA_1		X	X											X		
<4>	M_DP_TA_1																
<5>	M_ST_NA_1																
<6>	M_ST_TA_1																
<7>	M_BO_NA_1																
<8>	M_BO_TA_1																
<9>	M_ME_NA_1																
<10>	M_ME_TA_1																
<11>	M_ME_NB_1	X	X	X											X		
<12>	M_ME_TB_1																
<13>	M_ME_NC_1	X	X	X											X		
<14>	M_ME_TC_1																
<15>	M_IT_NA_1			X												X	
<16>	M_IT_TA_1																
<17>	M_EP_TA_1																
<18>	M_EP_TB_1																
<19>	M_EP_TC_1																
<20>	M_PS_NA_1																
<21>	M_ME_ND_1																
<30>	M_SP_TB_1			X													
<31>	M_DP_TB_1			X													
<32>	M_ST_TB_1																
<33>	M_BO_TB_1																
<34>	M_ME_TD_1																
<35>	M_ME_TE_1			X													
<36>	M_ME_TF_1			X													
<37>	M_IT_TB_1			X												X	
<38>	M_EP_TD_1																
<39>	M_IT_TB_1																
<40>	M_EP_TD_1																
<45>	C_SC_NA_1						R	R	R	R	R						R
<46>	C_DC_NA_1						R	R	R	R	R						R
<47>	C_RC_NA_1						R	R	R	R	R						R
<48>	C_SE_NA_1																
<49>	C_SE_NB_1																
<50>	C_SE_NC_1																
<51>	C_BO_NA_1																
<70>	M_EI_NA_1																
<100>	C_IC_NA_1						R	R	R	R	R						
<101>	C_CI_NA_1						R	R			R						
<102>	C_RD_NA_1					R											R
<103>	C_CS_NA_1						R	R									R
<104>	C_TS_NA_1																
<105>	C_RP_NA_1																
<106>	C_CD_NA_1																
<110>	P_ME_NA_1																
<111>	P_ME_NB_1																
<112>	P_ME_NC_1																
<113>	P_AC_NA_1																
<120>	F_FR_NA_1													X			
<121>	F_SR_NA_1													X			

<122>	F_SC_NA_1													X			
<123>	F_LS_NA_1													X			
<124>	F_AF_NA_1													X			
<125>	F_CG_NA_1													X			
<126>	F_DR_TA_1																

6. Basic application functions

Station initialization

☐ Remote initialization

Cyclic data transmission

☒ Cyclic data transmission

Read procedure

☐ Read procedure

Spontaneous transmission

☒ Spontaneous transmission

Double transmission of information objects with cause of transmission spontaneous

(station-specific parameter, mark each information type with an “X” where both a type ID without time and corresponding type ID with time are issued in response to a single spontaneous change of a monitored object) The following type identifications may be transmitted in succession caused by a single status change of an information object. The particular information object addresses for which double transmission is enabled are defined in a project-specific list.

☐ Single-point information M_SP_NA_1, M_SP_TA_1, M_SP_TB_1,

M_PS_NA_1

☐ Double-point information M_DP_NA_1, M_DP TA 1, M_DP_TB_1

☐ Step position information M_ST_NA_1, M_ST_TA_1, M_ST_TB_1

☐ Bitstring of 32 bit M_BO_NA_1, M_BO_TA_1, M_BO_TB_1 (if defined for a specific project, see 7.2.1.1)

☐ Measured value, normalized value M_ME_NA_1, M_ME_TA_1, M_ME_ND_1, M_ME_TD_1

☐ Measured value, scaled value M_ME_NB_1, M_ME_TB_1, M_ME_TE_1

☐ Measured value, short floating point number M_ME_NC_1, M_ME_TC_1, M_ME_TF_1

Station interrogation

☒ – Global

☒ – Group 1	☐ – Group 7	☐ – Group 13
☐ – Group 2	☐ – Group 8	☐ – Group 14
☐ – Group 3	☐ – Group 9	☐ – Group 15
☐ – Group 4	☐ – Group 10	☐ – Group 16
☐ – Group 5	☐ – Group 11	☐ – Information object addresses assigned to each group are configurable
☐ – Group 6	☐ – Group 12	

Clock synchronization

R – Clock synchronization

Command transmission

☒ Direct command transmission

☐ Direct set point command transmission

☒ Select and execute command

☐ Select and execute set point command

☐ C_SE ACTTERM used

☐ No additional definition

☒ Short-pulse duration (1 sec.)
☒ Long-pulse duration (1 sec.)
☒ Persistent output (255 sec.)

Transmission of integrated totals

☐ Mode A: local freeze with spontaneous transmission

☐ Mode B: local freeze with counter interrogation

☐ Mode C: freeze and transmit by counter interrogation commands

☐ Mode D: freeze by counter-interrogation command, frozen values reported spontaneously

☐ Counter read

☐ Counter freeze without reset

☐ Counter freeze with reset

☐ Counter reset

[R] – Clock synchronization
[R] – Request counter group 1

☐ Request counter group 2

☐ Request counter group 3

☐ Request counter group 4

Parameter loading

☐ Threshold value

☐ Smoothing factor

☐ Low limit for transmission of measured value

☐ High limit for transmission of measured

Parameter activation

☐ Act/deact of persistent cyclic or periodic transmission of the addressed object

Test procedure

☐ Test procedure

File transfer

File transfer in monitor direction

[X] Transparent file

☐ Transmission of disturbance data of protection equipmen

☐ Transmission of sequences of events

☐ Transmission of sequences of recorded analogue values

File transfer in control direction

☐ Transparent file

Background scan

☒ Background scan

For IEC 60870-5-104 only:

Definition of time outs

Parameter	Default value	Remarks	Selected value
t_0	30 s	Time-out of connection establishment	
t_1	15 s	Time-out of send or test APDUs	15
t_2	10 s	Time-out for acknowledges in case of no data messages t2 < t1	10
t_3	20 s	Time-out for sending test frames in case of a long idle state	20

Maximum range for timeouts t0 to t2: 1 s to 255 s, accuracy 1 s.

Maximum number of outstanding I format APDUs k and latest acknowledge APDUs (w):

Parameter	Default value	Remarks
K	1 APDU	Maximum difference receive sequence number to send state variable
W	1 APDU	Latest acknowledge after receiving w I format APDUs

K and W are not change.

Port number

Parameter	Value	Remarks
Port number	2404	In all cases

IP settings

	IP address	ASDU address
ENIP-2 default	192.168.0.10	
Socket №1	-	1
Socket №2	-	1
Socket №3	-	1
Socket №4	-	1

Appendix D. ENIP-2: IEC 61850

This conformance statement of IEC 61850 refers to ENIP-2 with firmware 2.0.0.6 or new.

IEC 61850 edition	1.0	2.0
ENIP-2 firmware	from 2.0.0.6 to 2.7.3.8	2.8.0.9 or newest
Documents	MICS; PICS; PIXIT; TICS.	Conformance Statement

Available parameters
MMXU1.PhV.phsA
MMXU1.PhV.phsB
MMXU1.PhV.phsC
MMXU1.PhV.net
MMXU1.PPV.phsAB
MMXU1.PPV.phsBC
MMXU1.PPV.phsCA
MMXU1.A.phsA
MMXU1.A.phsB
MMXU1.A.phsC
MMXU1.A.net
MMXU1.W.phsA
MMXU1.W.phsB
MMXU1.W.phsC
MMXU1.TotW
MMXU1.VAr.phsA
MMXU1.VAr.phsB
MMXU1.VAr.phsC
MMXU1.TotVAr
MMXU1.VA.phsA
MMXU1.VA.phsB
MMXU1.VA.phsC
MMXU1.TotVA
MMXU1.PF.phsA
MMXU1.PF.phsB
MMXU1.PF.phsC
MMXU1.TotPF
MMXU1.Hz
MSQI1.SeqV.c1
MSQI1.SeqV.c2
MSQI1.SeqV.c3
MSQI1.ImbNgV
MSQI1.SeqA.c1
MSQI1.SeqA.c2
MSQI1.SeqA.c3
MSQI1.ImbNgA
MMTR1.SupWh

Available parameters
MMTR1.DmdWh
MMTR1.SupVArh
MMTR1.DmdVArh
GGIO1.Ind1...Ind32
GGIO1.Ind1
GGIO1.Ind2
GGIO1.Ind3
GGIO1.Ind9
GGIO1.Ind10
GGIO1.Ind11
GGIO1.Ind12
GGIO1.Ind9
GGIO1.Ind10
GGIO1.Ind11
GGIO1.Ind12
GGIO1.Ind13
GGIO1.Ind14
GGIO1.Ind15
GGIO1.Ind16

● – available services

Table E.1.1 – Basic conformance statement

		Client/ subscriber	Server/ publisher	Value/ comments
Client-server roles				
B11	**Server** side (of TWO-PARTY APPLICATION-ASSOCIATION)		●	
B12	**Client** side of (TWO-PARTY APPLICATION-ASSOCIATION)			
SCSMs supported				
B21	SCSM: IEC 61850-8-1 used		●	
B22	SCSM: IEC 61850-9-1 used			
B23	SCSM: IEC 61850-9-2 used			
B24	SCSM: other			
Generic substation event model (GSE)				
B31	**Publisher** side		●	
B32	**Subscriber** side	●		
Transmission of sampled value model (SVC)				
B41	**Publisher** side			
B42	**Subscriber** side			

Table E.1.2 – ACSI models conformance statement

		Client/ subscriber	Server/ publisher	Value/ comments
If Server side (B11) supported				
M1	**Logical device**		●	
M2	**Logical node**		●	
M3	**Data**		●	
M4	**Data set**		●	
M5	**Substitution**			
M6	**Setting group control**			
	Reporting			
M7	**Buffered report control**		●	
M7-1	sequence-number		●	
M7-2	report-time-stamp		●	
M7-3	reason-for-inclusion		●	
M7-4	data-set-name		●	
M7-5	data-reference		●	
M7-6	buffer-overflow		●	
M7-7	entryID		●	
	conf_revision		●	
M7-8	BufTm		●	BufTm = 0
M7-9	IntgPd		●	
M7-10	GI		●	
M8	**Unbuffered report control**		●	
M8-1	sequence-number		●	
M8-2	report-time-stamp		●	
M8-3	reason-for-inclusion		●	
M8-4	data-set-name		●	
M8-5	data-reference		●	
	conf_revision		●	
M8-6	BufTm		●	BufTm = 0
M8-7	IntgPd		●	
M8-8	GI		●	
	Logging			
M9	**Log control**			
M9-1	IntgPd			
M10	**Log**			
M11	**Control**			
If GSE (B31/B32) is supported				
	GOOSE			
M12-1	entryID			
M12-2	DataRefInc			
M13	**GSSE**			
If SVC (B41/B42) is supported				

		Client/ subscriber	Server/ publisher	Value/ comments
M14	Multicast SVC			
M15	Unicast SVC			
M16	**Time**			
M17	**File Transfer**			

Table E.1.3 – ACSI service conformance statement

Services		AA: TP/MC	Client/ subscriber	Server/ publisher	Comments
Server (Clause 6)					
S1	Server Directory	TP		●	
Application association (Clause 7)					
S2	Associate			●	
S3	Abort			●	
S4	Release			●	
Logical device (Clause 8)					
S5	LogicalDeviceDirectory	TP		●	
Logical node (Clause 9)					
S6	LogicalNodeDirectory	TP		●	
S7	GetAllDataValues	TP		●	
Data (Clause 10)					
S8	GetDataValues	TP		●	
S9	SetDataValues	TP		●	
S10	GetDataDirectory	TP		●	
S11	GetDataDefinition	TP		●	
Data set (Clause 11)					
S12	GetDataSetValues	TP		●	
S13	SetDataSetValues	TP		●	
S14	CreateDataSet	TP		●	
S15	DeleteDataSet	TP		●	
S16	GetDataSetDirectory	TP		●	
Substitution (Clause 12)					
S17	SetDataValues	TP			
Setting group control (Clause 13)					
S18	SelectActiveSG	TP			
S19	SelectEditSG	TP			
S20	SetSGValues	TP			
S21	ConfirmEditSGValues	TP			
S22	GetSGValues	TP			

Services		AA: TP/MC	Client/ subscriber	Server/ publisher	Comments
S23	GetSGCBValues	TP			

Reporting (Clause 14)					
Buffered report control block (BRCB)					
S24	Report	TP		●	
S24-1	data-change (dchg)			●	
S24-2	qchg-change (qchg)			●	
S24-3	data-update (dupd)			●	
S25	GetBRCBValues	TP		●	
S26	SetBRCBValues	TP		●	
Unbuffered report control block (URCB)					
S27	Report	TP		●	
S27-1	data-change (dchg)			●	
S27-2	qchg-change (qchg)			●	
S27-3	data-update (dupd)			●	
S28	GetURCBValues	TP		●	
S29	SetURCBValues	TP		●	

Logging (Clause 14)					
Log control block					
S30	GetLCBValues	TP			
S31	SetLCBValues	TP			
Log					
S32	QueryLogByTime	TP			
S33	QueryLogAfter	TP			
S34	GetLogStatusValues	TP			

Generic substation event model (GSE) (14.3.5.3.4)					
GOOSE-CONTROL-BLOCK					
S35	SendGOOSEMessage	MC		●	
S36	GetGoReference	TP			
S37	GetGOOSEElementNumber	TP			
S38	GetGoCBValues	TP		●	
S39	SetGoCBValues	TP		●	
GSSE-CONTROL-BLOCK					
S40	SendGSSEMessage	MC			
S41	GetGsReference	TP			
S42	GetGSSEElementNumber	TP			
S43	GetGsCBValues	TP			
S44	SetGsCBValues	TP			

Transmission of sampled value model (SVC) (Clause 16)					
Multicast SVC					
S45	SendMSVMessage	MC			

Services		AA: TP/MC	Client/ subscriber	Server/ publisher	Comments
S46	GetMSVCBValues	TP			
S47	SetMSVCBValues	TP			
Unicast SVC					
S48	SendUSVMessage	TP			
S49	GetUSVCBValues	TP			
S50	SetUSVCBValues	TP			

Control (17.5.1)					
S51	Select	TP			
S52	SelectWithValue	TP		●	
S53	Cancel	TP		●	
S54	Operate	TP		●	
S55	CommandTermination	TP		●	
S56	TimeActivated-Operate	TP			

File transfer (Clause 20)					
S57	GetFile	TP			
S58	SetFile	TP			
S59	DeleteFile	TP			
S60	GetFileAttributeValues	TP			

Time (Clause 18)					
T1	Time resolution of internal clock	TP		1 ms	
T2	Time accuracy of internal clock	TP		1 ms	
T3	Supported TimeStamp resolution	TP		1 ms	

Mandatory tissues

Table D.1.4

Part	Tissue #	Technical Issue Subject	Applied/Yes/ Not applied
8-1	116	GetNameList with empty response?	Yes
	165	Improper Error Response for GetDataSetValues	Yes
	183	GetNameList error handling	Yes
	246	Control negative response	Not applied
	545	FIle directories	Not applied
7-4			
7-3	28	Definition of APC	Not applied
	54	Point def xVal, not cVal	Not applied
	55	Ineut = Ires ?	Not applied
	63	mag in CDC CMV	Yes
	219	operTm in ACT	Not applied
	270	WYE and DEL rms values	Yes
7-2	30	control parameter T	Yes
	31	Typo	Not applied
	32	Typo in syntax	Not applied
	35	Typo Syntax Control time	Not applied
	36	Syntax parameter DSet-Ref missing	Not applied
	37	Syntax GOOSE "T" type	Yes
	39	Add DstAddr to GoCB	Yes
	40	GOOSE Message “AppID” to “GoID”	Yes
	41	GsCB “AppID” to “GsID”	Not applied
	42	SV timestamp: “EntryTime” to “TimeStamp"	Not applied
	43	Control "T" semantic	Not applied
	44	AddCause - Object not sel	Yes
	45	Missing AddCauses	Yes
	46	Synchro check cancel	Yes
	47	"." in LD Name?	Yes
	49	BRCB TimeOfEntry? (part of #453)	-
	50	LNName start with number?	Yes
	51	ARRAY [0..num] missing	Yes
	52	Ambiguity GOOSE SqNum	Yes
	53	Add DstAddr to GsCB, SV	Not applied
	151	Name constraint for control blocks etc.	Yes
	166	DataRef attribute in Log	Not applied
	185	Logging - Integrity periode	Not applied
	189	SV Format	Not applied
	190	BRCB: EntryId and TimeOfEntry	-
	191	BRCB: Integrity and buffering reports (part of #453)	-
	275	Confusing statement on GI usage (part of #453)	-
	278	EntryId not valid for a server (part of #453)	-
	297	Sequence number (part of #453)	-
	298	Type of SqNum	Yes

	305	Reporting with BufTm=0 (part of #453)	Yes
	322	Write Configuration attribute of BRCBs (part of #453)	-
	329	Reporting and BufOvl (part of #453)	-
	333	Enabling of an incomplet GoCB	Yes
	335	Clearing of Bufovfl (part of #453)	-
	348	URCB class and report (part of #453)	-
	349	BRCB TimeOfEntry has two definitions (part of #453)	-
	453	Reporting & Logging model revision	Yes
6	1	Syntax	Yes
	5	tExtensionAttributeNameEnum is restricted	Yes
	8	SIUnit enumeration for W	Not applied
	10	Base type for bitstring usage	Yes
	17	DAI/SDI elements syntax	Yes
	169	Ordering of enum differs from 7-3	Not applied
	249	Mapping of CODED ENUM	Yes
	529	sev	Yes

Notice: Tissue 49, 190, 191, 275, 278, 297, 305, 322, 329, 333, 335, 348 and 349 are parts of optional tissue # 453.

Other tissues completed

Table D.1.5

Part	Tissue #	Описание
7-2	333	Enabling of an incomplet GoCB
7-2	322	Write Configuration attribute of BRCBs
8-1	177	Ignoring OptFlds bits for URCB

Appendix E. ENIP-2: SNMP

ENIP-2 can transmit the following Management Information Base (MIB) (*.mib file for ENIP-2 is here):

Community: all; public

MIB-object	Description	Value
SysDescr.0	Device name	Intelligent electronic device ENIP-2 (v2)
SysUpTime.0	Time after start	XX hours, XX minutes, XX seconds
SysContact.0	Contact info	www.enip2.com, ed@ens.ru, +7 (818-2) 64-60-00
SysName.0		ENIP-2(v2)-45/100-220-A3E4-21
ifNumber.0	Number of interfaces	5
ifIndex1	The number of interface 1	1
ifIndex2	The number of interface 2	2
ifIndex3	The number of interface 3	3
ifIndex4	The number of interface 4	4
ifIndex5	The number of interface 5	5
ifName1	Interface description 1	Eth0
ifName2	Interface description 2	rs485-1
ifName3	Interface description 3	rs485-2
ifName4	Interface description 4	rs485-3
ifName5	Interface description 5	USB
ifInOctets1	Receive octets via interface 1	Value
ifInOctets2	Receive octets via interface 2	Value
ifInOctets3	Receive octets via interface 3	Value
ifInOctets4	Receive octets via interface 4	Value
ifInOctets5	Receive octets via interface 5	Value
ifOutOctets1	Send octets via interface 1	Value
ifOutOctets2	Send octets via interface 2	Value
ifOutOctets3	Send octets via interface 3	Value
ifOutOctets4	Send octets via interface 4	Value
ifOutOctets5	Send octets via interface 5	Value
errorADC	ADC error/ no power supply	On/off
errorEth	No connection with Ethernet	On/off
errorRTC	Clock error	On/off
errorBAT	Low battery voltage	On/off
errorAuth	Authorization error	On/off
error2ETH	Internal communications error in ENIP-2 with 2 Ethernet ports	On/off
errorSync	Sync time error	On/off
errorExt	External device error	On/off
errorDO	DO error	On/off
dio1	Status DIO1	On/off
dio2	Status DIO2	On/off

dio3	Status DIO3	On/off
dio4	Status DIO4	On/off
dio5	Status DIO5	On/off
dio6	Status DIO6	On/off
dio7	Status DIO7	On/off
dio8	Status DIO8	On/off
dio9	Status DIO9	On/off
dio10	Status DIO10	On/off
dio11	Status DIO11	On/off
dio12	Status DIO12	On/off
dio13	Status DIO13	On/off
dio14	Status DIO14	On/off
dio15	Status DIO15	On/off
dio16	Status DIO16	On/off
dio17	Status DIO17	On/off
dio18	Status DIO18	On/off
dio19	Status DIO19	On/off
dio20	Status DIO20	On/off
dio21	Status DIO21	On/off
dio22	Status DIO22	On/off
dio23	Status DIO23	On/off
dio24	Status DIO24	On/off
dio25	Status DIO25	On/off
dio26	Status DIO26	On/off
dio27	Status DIO27	On/off
dio28	Status DIO28	On/off
dio29	Status DIO29	On/off
dio30	Status DIO30	On/off
dio31	Status DIO31	On/off
dio32	Status DIO32	On/off
voltagePhaseA	Ua	Value
voltagePhaseB.	Ub	Value
voltagePhaseC	Uc	Value
voltagePhaseAverage	Average U	Value
voltageLineAB	Uab	Value
voltageLineBC	Ubc	Value
voltageLineCA	Uca	Value
voltageLineAverage	Average line-to-line U	Value
currentPhaseA	Ia	Value
currentPhaseB	Ib	Value
currentPhaseC	Ic	Value
currentPhaseAverage	Average I	Value
powerActiveA	Pa	Value
powerActiveB	Pb	Value
powerActiveC	Pc	Value
powerActiveTotal	Total P	Value
powerReactiveA	Qa	Value
powerReactiveB	Qb	Value
powerReactiveC	Qc	Value
powerReactiveTotal	Total Q	Value
powerApparentA	Sa	Value
powerApparentB	Sb	Value
powerApparentC	Sc	Value
powerApparentTotal	Total S	Value
voltageH1PhaseA.	Ua1	Value
voltageH1PhaseB.	Ub1	Value

voltageH1PhaseC	Uc1	Value
voltageH1PhaseAverage	Average U1	Value
voltageH1LineAB	Uab1	Value
voltageH1LineBC	Ubc1	Value
voltageH1LineCA	Uca1	Value
voltageH1LineAverage	Average line-to-line U1	Value
currentH1PhaseA	Ia1	Value
currentH1PhaseB	Ib1	Value
currentH1PhaseC	Ic1	Value
currentH1PhaseAverage	Average I1	Value
powerH1ActiveA	Pa1	Value
powerH1ActiveB	Pb1	Value
powerH1ActiveC	Pc1	Value
powerH1ActiveTotal	Total P1	Value
powerH1ReactiveA	Qa1	Value
powerH1ReactiveB	Qb1	Value
powerH1ReactiveC	Qc1	Value
powerH1ReactiveTotal	Total Q1	Value
powerH1ApparentA	Sa1	Value
powerH1ApparentB	Sb1	Value
powerH1ApparentC	Sc1	Value
powerH1ApparentTotal	Total S1	Value
phsA	cos φ, phase A	Value
phsB	cos φ, phase B	Value
phsC	cos φ, phase C	Value
phsTotal	cos φ, total	Value
frequency	F	Value
voltageZero	U0 – voltage zero sequence	Value
voltagePos	U1 - voltage positive sequence	Value
voltageNeg	U2 – voltage negative sequence	Value
vuf	KuU – voltage unbalance	Value
vTHD	KdU – voltage distortion	Value
currentZero	I0 - current zero sequence	Value
currentPos	I1 - ток positive sequence	Value
currentNeg	I2 - ток negative sequence	Value
iuf	KuI – current unbalance	Value
iTHD	KdI – current distortion	Value
thd	THD - total harmonic distortion	Value
temperature	T – internal temperature	Value
energyActiveImport.	WP+ active energy, forward direction	Value
energyActiveExport	WP- active energy, reverse direction	Value
energyReactiveImport	WQ+ reactive energy, forward direction	Value
energyReactiveExport	WQ- reactive energy, reverse direction	Value